Rev. 00

1017 997 **EN**

Operating instructions and Spare parts list

Manual equipment OptiFlex Pro K

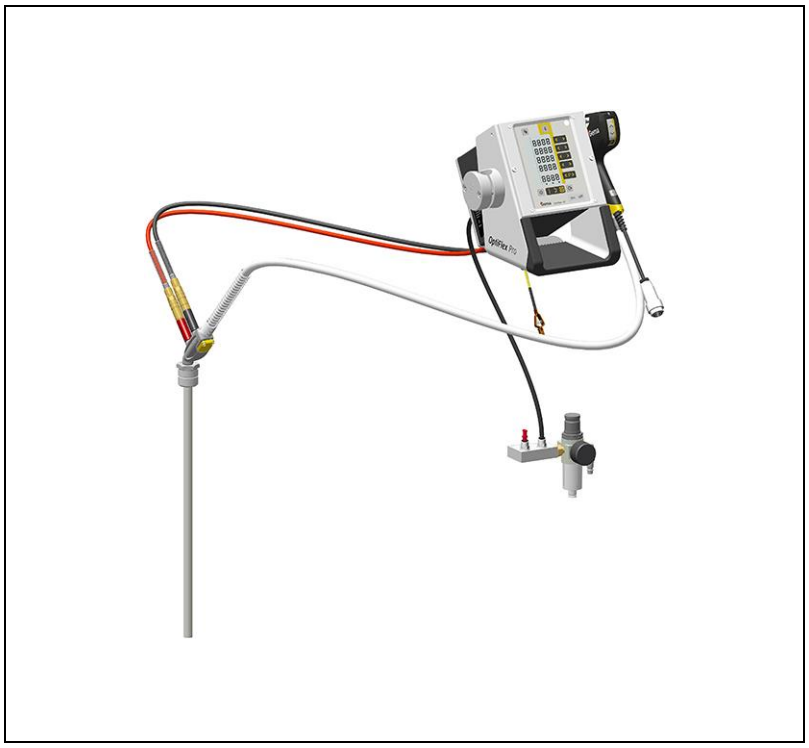

Translation of the original operating instructions

Gema

Documentation OptiFlex Pro K

© Copyright 2019 Gema Switzerland GmbH

All rights reserved.

This publication is protected by copyright. Unauthorized copying is prohibited by law. No part of this publication may be reproduced, photocopied, translated, stored on a retrieval system or transmitted in any form or by any means for any purpose, neither as a whole nor partially, without the express written consent of Gema Switzerland GmbH.

Gema, EquiFlow, MagicCompact, MagicCylinder, OptiCenter, OptiFlex, OptiGun, OptiSelect and OptiStar are registered trademarks of Gema Switzerland GmbH.

ClassicLine, ClassicStandard, ClassicOpen, DVC (Digital Valve Control), GemaConnect, MagicControl, MagicPlus, MonoCyclone, MRS, MultiColor, MultiStar, OptiAir, OptiControl, OptiColor, OptiFeed, OptiFlow, OptiHopper, OptiMove, OptiSieve, OptiSpeeder, OptiSpray, PCC (Precise Charge Control), RobotGun, SIT (Smart Inline Technology) und SuperCorona are trademarks of Gema Switzerland GmbH.

All other product names are trademarks or registered trademarks of their respective holders.

Reference is made in this manual to different trademarks or registered trademarks. Such references do not mean that the manufacturers concerned approve of or are bound in any form by this manual. We have endeavored to retain the preferred spelling of the trademarks, and registered trademarks of the copyright holders.

To the best of our knowledge and belief, the information contained in this publication was correct and valid on the date of publication. Gema Switzerland GmbH makes no representations or warranties with respect to the contents or use of this publication, and reserves the right to revise this publication and make changes to its content without prior notice.

For the latest information about Gema products, visit www.gemapowdercoating.com.

For patent information, see www.gemapowdercoating.com/patents or www.gemapowdercoating.us/patents.

Printed in Switzerland

Gema Switzerland GmbH
Mövenstrasse 17
9015 St.Gallen
Switzerland

Phone: +41-71-313 83 00
Fax.: +41-71-313 83 83

E-mail: info@gema.eu.com

Table of contents

About these instructions 7

General information 7
Keeping the Manual 7
Safety symbols (pictograms) 7
Structure of Safety Notes 8
Presentation of the contents 8
Figure references in the text 8

Safety 9

General information 9
Basic safety instructions 9
Product specific security regulations 10

Product description 15

Intended use 15
Reasonably foreseeable misuse 16
Structure 16
Overall view 16
Scope of delivery 17
Typical characteristics – properties of the functions 17
Processing of the powder from the fluidized powder container 17
PowerClean™ module – Option 17
Technical Data 19
Connectable guns 19
Electrical data 19
Pneumatic data 19
Dimensions 20
Processible powders 20
Powder output (reference values) 20
Air flow rates 21
Environmental conditions 21
Sound pressure level 22
Rating plate 22

Assembly / Connection 23

Set-up 23
Assembly guide 23
Connection instructions 24

Start-up 27

Preparation for start-up 27
Basic conditions 27
Initial start-up 28
Setting the device type 28

Operation 29

Operation ... 29
Select predefined operating mode (Preset mode) ... 30
Starting the individual adjustable programs ... 30
Setting powder output and powder cloud ... 31
Setting the electrode rinsing air ... 32
Setting the fluidization ... 33
Rinsing mode ... 34
Activating the rinsing function ... 34
Setting the background illumination ... 37
Color change ... 38
General information ... 38

Decommissioning / Storage 39

Decommissioning ... 39
If in disuse for several days ... 39
Storage conditions ... 39
Hazard notes ... 39
Type of storage ... 39
Storage duration ... 39
Space requirements ... 39
Physical requirements ... 40
Maintenance during storage ... 40
Maintenance schedule ... 40
Maintenance works ... 40

Maintenance / Repairs 41

General information ... 41
Interval ... 41
Daily maintenance ... 41
Weekly maintenance ... 41
If in disuse for several days ... 42
Gun maintenance ... 42
Cleaning ... 43
Gun cleaning ... 43
Cleaning the powder container ... 44
Repair work ... 44
Periodic checks ... 44

Fault clearance 45

Disposal 47

Introduction ... 47
Requirements on personnel carrying out the work ... 47
Disposal regulations ... 47
Materials ... 47

Spare parts list 49

Ordering spare parts ... 49
OptiFlex Pro K – Spare parts list ... 50
OptiFlex Pro K – Spare parts ... 51
Pneumatic group ... 52
PowerClean module set** ... 53

About these instructions

General information

This operating manual contains all important information which you require for the working with the OptiFlex Pro K. It will safely guide you through the start-up process and give you references and tips for the optimal use when working with your powder coating system.

Information about the functional mode of the individual system components should be referenced in the respective enclosed documents.

▶ **This operating manual describes all options and functions of this manual coating equipment.**

- Please note that your manual coating equipment may not be equipped with all described functions.
- Options are marked by double asterisks**.

Keeping the Manual

Please keep this Manual ready for later use or if there should be any queries.

Safety symbols (pictograms)

The following warnings with their meanings can be found in the Gema instructions. The general safety precautions must also be followed as well as the regulations in the relevant instructions.

⚠ DANGER

Indicates a hazardous situation which, if not avoided, will result in death or serious injury.

⚠ WARNING

Indicates a hazardous situation which, if not avoided, could result in death or serious injury.

⚠ CAUTION

Indicates a hazardous situation which, if not avoided, could result in minor or moderate injury.

ATTENTION

Indicates a potentially harmful situation. If not avoided, the equipment or something in its surrounding may be damaged.

ENVIRONMENT

Indicates a potentially harmful situation which, if not avoided, may have harmful consequences for the environment.

!

MANDATORY NOTE

Information which must be observed.

▶

NOTICE

Useful information, tips, etc.

Structure of Safety Notes

Every note consists of 4 elements:

– Signal word
– Nature and source of the danger
– Possible consequences of the danger
– Prevention of the danger

⚠ SIGNAL WORD

Nature and source of the hazard!
Possible consequences of the danger
▶ Prevention of the danger

Presentation of the contents

Figure references in the text

Figure references are used as cross references in the descriptive text.

Example:

"The high voltage (**H**) created in the gun cascade is guided through the center electrode."

Safety

General information

This chapter provides the user and third parties who operate this product with all essential safety regulations, the adherence to which is imperative.

These safety regulations must be read and understood in their entirety before the product is put into operation.

The standards and guidelines applied during the development, manufacture and configuration are described in the EC declaration of conformity and in the manufacturer's declaration.

⚠ WARNING

Working without instructions

Working without instructions or with individual pages from the instructions may result in damage to property and personal injury if relevant safety information is not observed.

- ► Before working with the device, organize the required documents and read the section "Safety regulations".
- ► Work should only be carried out in accordance with the instructions of the relevant documents.
- ► Always work with the complete original document.

Basic safety instructions

- This product is built to the latest specification and conforms to the recognized technical safety regulations and is designed for the normal application of powder coating.
- Any other use is considered non-compliant. The manufacturer shall not be liable for damage resulting from such use; the user bears sole responsibility for such actions. If this product is to be used for other purposes or other substances outside of our guidelines then Gema Switzerland GmbH should be consulted.
- Start-up (i.e. the execution of intended operational tasks) is forbidden until it has been established that this product has been set up and wired according to the guidelines for machinery. The standard "Machine safety" must also be observed.
- Unauthorized modifications to the product exempt the manufacturer from any liability from resulting damage.

- The relevant accident prevention regulations, as well as other generally recognized safety regulations, occupational health and structural regulations are to be observed.
- Furthermore, the country-specific safety regulations also must be observed.

Product specific security regulations

- This product is a constituent part of the equipment and is therefore integrated in the system's safety concept.
- If it is to be used in a manner outside the scope of the safety concept, then corresponding measures must be taken.
- The installation work to be done by the customer must be carried out according to local regulations.
- It must be ensured, that all components are earthed according to the local regulations before start-up.

▶ **For further security information, see the more detailed Gema safety regulations!**

⚠ WARNING

These general safety regulations must be read and understood in all cases prior to start-up!

General information

This product is built to the latest specification and conforms to the recognized technical safety regulations and is designed for the normal application of powder coating.

Any other use is considered non-compliant. The manufacturer shall not be liable for damage resulting from such use; the user bears sole responsibility for such actions. If this product is to be used for other purposes or other substances outside of our guidelines then Gema Switzerland GmbH should be consulted.

Observance of the operating, service and maintenance instructions specified by the manufacturer is also part of conformity of use.

The relevant accident prevention regulations, as well as other generally recognized safety regulations, occupational health and structural regulations are to be observed.

Furthermore, the country-specific safety regulations also must be observed.

Additional safety and operation notices can be found on the accompanying CD or on the homepage www.gemapowdercoating.com.

General dangers

Start-up is forbidden until it has been established that the product has been set up and wired according to the EU guidelines for machinery.

Unauthorized modifications to the product exempt the manufacturer from any liability from resulting damages or accidents.

The operator must ensure that all users do have the appropriate training for powder spraying equipment and are aware of the possible sources of danger.

Any operating method, which will negatively influence the technical safety of the powder spraying equipment, is to be avoided.

For your own safety, only use accessories and attachments listed in the operating instructions. The use of other parts can lead to risk of injury. Only original Gema spare parts should be used!

Repairs must only be carried out by specialists or by authorized Gema service centers. Unauthorized conversions and modifications can lead to injuries and damage to the equipment and invalidate the Gema Switzerland GmbH guarantee.

Electrical danger

The connecting cables between the control unit and the spray gun must be installed in such a way, that they cannot be damaged during the operation. Please observe the local safety regulations!

The plug connections between the powder spraying equipment and the mains should only be removed when the power supply is switched off.

All maintenance activities must take place when the powder spraying equipment is switched off.

The product may not be switched on until the booth is in operation. If the booth stops, the product must switch off too.

Explosion hazard

The control units for the spray guns must be installed and used in zone 22. Spray guns are allowed in zone 21.

Only original Gema OEM parts are guaranteed to maintain the explosion protection rating. If damages occur by using spare parts from other manufacturers, the warranty or compensation claim is void!

Conditions leading to dangerous levels of dust concentration in the powder spraying booths or in the powder spraying areas must be avoided. There must be sufficient technical ventilation available, to prevent a dust concentration of more than 50% of the lower explosion limit (UEG = max. permissible powder/air concentration). If the UEG is not known, then a value of 10 g/m³ should be considered (see EN 50177).

All unauthorized conversions and modifications to the electrostatic spraying equipment are forbidden for safety reasons.

No safety devices should be dismantled or put out of operation.

Mandatory operational and workplace notices from the operating company must be written in a comprehensible manner in the language of equipment operators and posted in a suitable place.

Slip hazard

Powder lying on the floor around the powder spraying equipment is a potentially dangerous source of slipping. Booths may be entered only in the places suitable for it.

Static charges

Static charges can have the following consequences: Charges to people, electric shocks, sparking. Proper grounding must be in place to prevent objects from becoming charged.

Grounding

Observe the grounding regulations

All electrically conductive parts found in the workplace of 5 meters around each booth opening, and particularly the objects to be coated, have to be grounded. The grounding resistance of each object must amount to maximally 1 MOhm. This resistance must be checked/tested regularly when starting work.

The condition of the work piece attachments, as well as the hangers, must guarantee that the work pieces remain grounded. The appropriate measuring devices must be kept ready in the workplace, in order to check the grounding.

The floor of the coating area must conduct electricity (normal concrete is generally conductive).

The supplied grounding cable (green/yellow) must be connected to the grounding screw of the electrostatic manual powder coating equipment. The grounding cable must have a good metallic connection with the coating booth, the recovery unit and the conveyor chain, respectively with the suspension arrangement of the objects.

Smoking and open flames

Fire and smoke prohibition

Smoking and igniting fire are forbidden in the entire vicinity of the system! No work that could potentially produce sparks is allowed!

Stay for persons with cardiac pacemakers

The stay for persons with cardiac pacemakers is forbidden

As a general rule for all powder spraying installations, persons with pacemakers should never enter high voltage areas or areas with electromagnetic fields. Persons with pacemakers should not enter areas with powder spraying installations!

Photographing with flashlight

Photographing with flashlight is forbidden

Photographing with flashlight can lead to unnecessary releases and/or disconnections by safety devices.

Maintenance works

Disconnect from mains before maintenance works take place

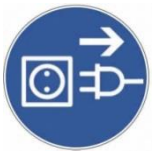

Disconnect the plugs before the machines are opened for maintenance or repair.

The plug connections between the powder spraying equipment and the mains should only be removed when the power supply is switched off.

As far as it is necessary, the operating firm must ensure that the operating personnel wear protective clothing (e.g. facemasks).

A dust mask corresponding to filter class FFP2 or N95 at minimum must be worn during any cleaning work.

The operating personnel must wear electrically conductive, steel-toe footwear (e.g. leather soles).

The operating personnel should hold the gun with bare hands. If gloves are worn, these must also conduct electricity.

Product description

Intended use

This Manual coating equipment is for use with organic powders coating electrostatically grounded objects.

Fig. 1

Observance of the operating, service and maintenance instructions specified by the manufacturer is also part of conformity of use. This product should only be used, maintained and started up by trained personnel, who are informed about and are familiar with the possible hazards involved.

Any other use is considered non-compliant. The manufacturer is not responsible for any incorrect use and the risks associated with such actions are assumed by the user alone!

Reasonably foreseeable misuse

– Operation without the proper training
– Use with insufficient compressed air quality and grounding
– Use in connection with unauthorized coating devices or components

Structure

Overall view

fig. 2

1 OptiStar CG21 Gun control unit
2 OptiSelect Pro GM04 manual powder gun
3 OptiFlow injector
4 Suction tube
5 Filter unit
6 Shelf
7 Clamping element

OptiSelect Pro GM04 manual powder gun

All information about the OptiSelect Pro GM04 manual powder gun can be found in the documentation for that equipment (enclosed with this manual)!

OptiStar 4.0 Gun control unit

All information about the OptiStar 4.0 (Type CG21) manual gun control unit can found in the documentation for that equipment (enclosed with this manual)!

OptiFlow injector

All information about the OptiFlow injector will be found in the corresponding enclosed documentation!

Scope of delivery

- OptiSelect Pro GM04 manual powder gun with gun cable, powder hose, rinsing air hose and standard nozzle set (For more on this, see the operating manual for the OptiSelect Pro GM04 manual powder gun)
- OptiStar 4.0 Control unit in a metal case with power supply cable
- plug-in OptiFlow injector
- Suction tube
- PowerClean module**
- Pneumatic hoses for conveying air (red), supplementary air (black) and rinsing air** (black)
- Operating manual
- Short description

Typical characteristics – properties of the functions

Processing of the powder from the fluidized powder container

The OptiFlex 2 F manual coating equipment processes powder from the fluidized powder container.

PowerClean™ module – Option

Field of application

The PowerClean module can be used in combination with the OptiStar control unit.

The PowerClean module provides increased stability in application processes. It prevents the bridging phenomena that can lead to short circuiting when handling powders such as metallic powders.

In moist or tropical environments, any moisture is driven from the injector, powder hose and powder gun. The color change is also accelerated during non-extreme color switches.

fig. 3

Technical Data

Connectable guns

OptiFlex Pro K	connectable
OptiSelect Pro Type GM04	yes
OptiSelect type GM03	yes*
TriboJet	yes**

* The PowderBoost functionality is not available

** The gun type must be configured (refer to chapter "Additional functions"). The Tribo gun the gun is not type approved (ATEX).

WARNING

The gun control unit may only be used with the specified gun types!

Electrical data

OptiFlex Pro K	
Nominal input voltage	100-240 VAC
Frequency	50-60 Hz
Fluctuations of the power supply	± 10 %
Overvoltage category	OVC II
Connected load	40 VA
Nominal output voltage (to the gun)	12 V
Nominal output current (to the gun)	1.2 A
Connection and output for vibrator (on Aux output)	100-240* VAC max. 100 W
Connection for rinsing function (valve)	24 VDC max. 3 W
Protection type	IP54
Approvals	CE Ex II 3 D

Pneumatic data

OptiFlex Pro K	
Compressed air connection	8 mm
Max. input pressure	5.5 bar / 80 psi
Max. water vapor content of the compressed air	1.3 g/m³
Max. oil vapor content of the compressed air	0.1 mg/m³

Dimensions

OptiFlex Pro K	
Width	333 mm
Depth	460 mm
Height	697 mm
Weight	ca. 9 kg

Processible powders

OptiFlex Pro K	
Plastic powder	yes
Metallic powder	yes
Enamel powder	no

Powder output (reference values)

General conditions for the OptiFlow Injector

Powder type	Epoxy/polyester
Powder hose Ø (**mm**)	11
Type of powder hose	POE with guide strips
Input pressure (**bar**)	5.5
Correction value C0	Powder output zeroing adjustment

Guide values for OptiStar with OptiFlow Injector

All values in these tables are guide values for new nozzle inserts. Differing environmental conditions, wear and different powder types can affect the table values.

Hose internal diameter (mm)		**Ø 11**					
Hose length (m)		**6**		**12**		**18**	
Total air volume (Nm³/h)		**3.5**	**5.5**	**3.5**	**5.5**	**3.5**	**5.5**
		Powder output (g/min)					
Powder output (%)	**20**	90	105	65	75	45	60
	40	170	205	135	150	100	120
	60	235	280	185	215	145	170
	80	290	350	235	270	185	220
	100	340	405	280	320	220	260

Air flow rates

The total air consists of conveying air and supplementary air, in relation to the selected powder quantity (in %). As a result the total air volume is maintained constant.

OptiFlex Pro K	Range	Factory setting
Flow rate – fluidizing air:		
– Device type B	0-1.0 Nm³/h	0.1 Nm³/h
– Device type F (without AirMover air requirements)	0-5.0 Nm³/h	1.0 Nm³/h
– Device type S (with optional fluid plate)	0-1.0 Nm³/h	0.1 Nm³/h
Electrode rinsing air flow rate	0-5.0 Nm³/h	0.1 Nm³/h
Flow rate total air (at 5.5 bar)	5 Nm³/h	
– Conveying air flow rate	0-5.5 Nm³/h	
– Supplementary air flow rate	0-5.5 Nm³/h	

▶ **The max. total air consumption during the coating operation is < 5,5 Nm³/h:**

- Total air = 5 Nm³/h (conveying air + supplementary air)
- Electrode rinsing air = 0,1 Nm³/h (flat jet nozzle)

▶ **The total air consumption for the device is determined based on the 3 configured air values (without AirMover air value for device type F).**

- These values apply for an internal control pressure of 5.5 bar!

Environmental conditions

OptiFlex Pro K	
Utilization	in the interior
Height	up to 2 000 m
Temperature range	+5 °C - +40 °C (+41 °F - +104 °F)
Max. surface temperature	+85 °C (+185 °F)
Maximum relative humidity	80 % for temperatures to 31 °C, linearly decreasing to 50 % relative humidity at 40 °C
Environment	not for wet environment
Degree of pollution of the intended environment	2 (in accordance with DIN EN 61010-1)

Sound pressure level

OptiFlex Pro K	
Normal operation	< 60 dB(A)

The sound pressure level was measured while the unit was in operation; measurements were taken at the most frequent operator positions and at a height of 1.7 m from the ground.

The specified value is applicable only for this product itself and does not take into account external noise sources or cleaning impulses.

The sound pressure level may vary, depending on the product configuration and space constraints.

Rating plate

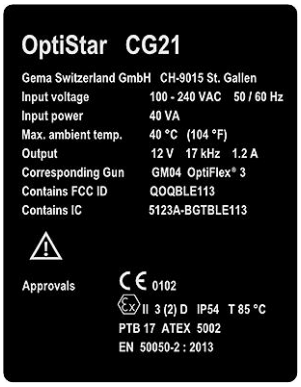

fig. 4

Assembly / Connection

Set-up

The manual coating equipment should always be set up vertically on a flat surface.

WARNING:

Surrounding temperature too high

- ► Install the equipment only in locations with an ambient temperature of between +5 and +40 °C, i.e. never next to heat sources (such as an enameling furnace) or electromagnetic sources (such as a control cabinet).

Assembly guide

The manual coating equipment must be set up in accordance with the setup and connecting instructions (included with delivery).

fig. 5

Connection instructions

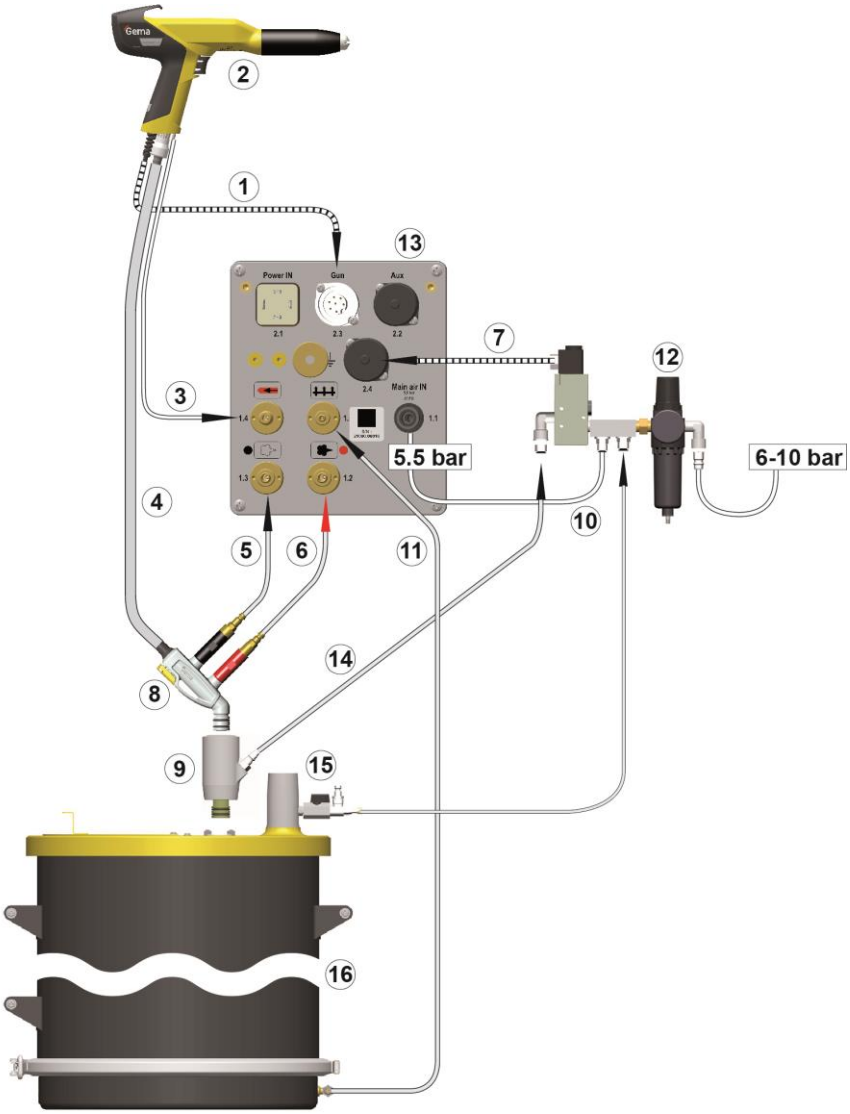

fig. 6: Connecting guide – overview

1	Gun cable	9	PowerClean™ module (Option)
2	Manual gun	10	Compressed air hose
3	Electrode rinsing air hose	11	Fluidizing air hose
4	Powder hose	12	Maintenance unit
5	Supplementary air hose	13	OptiStar Control unit
6	Conveying air hose	14	Rinsing air hose
7	Control signal cable	15	AirMover
8	Injector	16	Fluidized powder hopper

!

Use clamp to connect grounding cable to the cabin or the suspension arrangement.

► Check ground connections with Ohm meter and ensure 1 MOhm or less.

▶ **The compressed air must be free of oil and water!**

! **Close the unused connections with the provided dust protection caps!**

Start-up

Preparation for start-up

Basic conditions

When starting up the gun control unit, the following general conditions impacting the coating results must be taken into consideration:

– Gun correctly connected
– Gun control unit correctly connected
– Corresponding power and compressed air supply available
– Powder preparation and powder quality OK

Initial start-up

If a malfunction occurs, see the troubleshooting guide, as well as the gun control unit operating manual!

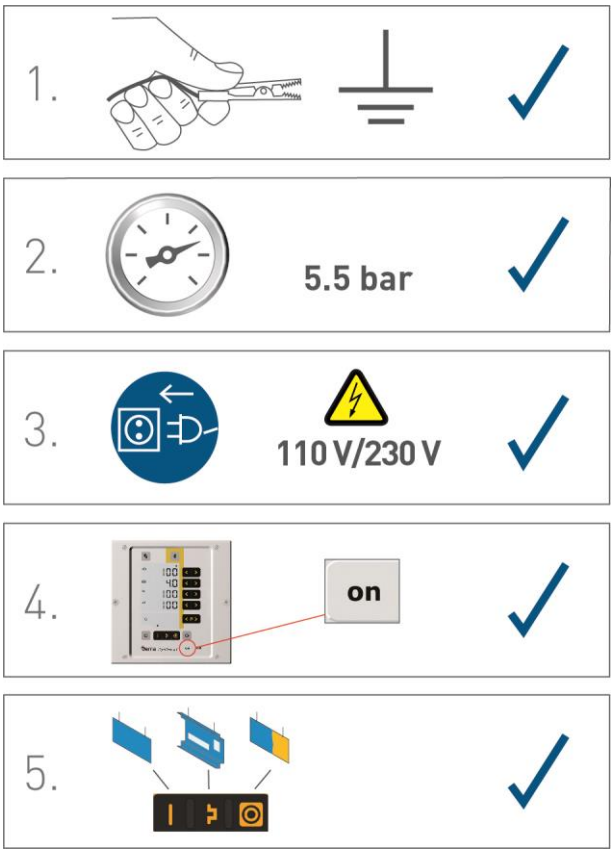

fig. 7

The remainder of the start-up procedure for the gun is explicitly described in the operating instructions for the OptiStar CGxx manual powder gun control unit (chapter "Initial start-up" and "Daily start-up")!

Setting the device type

If the control unit is supplied as a component of a manual coating unit, then the corresponding system parameter is set correctly by the factory!

WARNING:

A wrong parameterization leads to various malfunctions!

- For more on this, please also see the operating instructions for the OptiStar CGxx gun control unit!

Operation

⚠ WARNING

Holding the gun incorrectly

During the coating process, the gun can discharge along the body of the coater if not held using its intended handle, which has been grounded.

- ► Always hold gun only by the handle!
- ► Do not touch any other parts of the gun!

Operation

⚠ CAUTION

Large dust formation possible!

If the manual equipment is not being used for coating in conjunction with a sufficiently powerful suction unit, then the stirred-up dust from the coating powder can cause respiratory issues or cause a slippage/falling hazard.

- ► The manual equipment may only be operated in conjunction with a sufficiently powerful suction unit (such as Gema Classic Open booth).

1. Place powder hopper on the mobile trolley

⚠ CAUTION

Foot injury!

When setting the powder hopper onto the mobile trolley of the manual equipment, the hopper/trolley zone represents a threat of crushed toes

- ► Wear safety shoes with steel toecaps.

2. Set the ventilation (Airmover)
   - – Open the ball valve completely
   - – Calibrate with the throttle valve
3. Fill in powder
   - – Open the powder hopper filling cover.
   - – Fill in powder: Fill with maximum 25 kg (50 l) powder or the powder must reach to a maximum of 5-10 cm below the handles

of the powder hopper; otherwise the fluidized powder can escape from the cover.

– Close the filling cover of the powder hopper again.

4. Set coating parameters:

Select predefined operating mode (Preset mode)

1. Turn on the gun control unit with the **ON** key
2. Press the corresponding application key.

   The arrow above the desired button lights up.

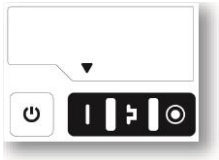

The pre-defined application modes have preset values for high voltage and spray current:

Application mode		Preset µA	Preset kV
I	flat parts	100	100
⚡	complicated parts	22	100
◉	overcoat	10	100

3. The air values for total air, powder output and electrode rinsing air can be individually defined and are saved in the programs.

Starting the individual adjustable programs

1. Turn on the gun control unit with the **ON** key
2. Press the < P > program key
3. Select the desired program (01-20)

Program 20 active

4. Change the coating parameters as required

Programs 01-20 are preset at the factory but can be modified at any time, after which they are automatically stored.

Description		Presetting
	Powder output	60 %
	Total air	4.0 Nm³/h
kV	High voltage	80 kV
µA	Spray current	20 µA
	Electrode rinsing air	0.1 Nm³/h
	Fluidizing air	1.0 Nm³/h (for device type F) 0.1 Nm³/h (for device type B and S)

Setting powder output and powder cloud

The powder output depends on the selected powder output (in %), and the powder cloud on the selected total air volume.

As a factory default value, a powder rate of 50% and a total air volume of 4 Nm³/h are recommended.

– If values are entered that the gun control unit cannot implement, then the operator is informed of this by a blinking in the relevant display and a temporary error message!

Setting the total air volume

1.

   Adjust the total air volume on the gun control unit with the **T3/T4** keys

– Adjust the total air volume according to the corresponding coating requests

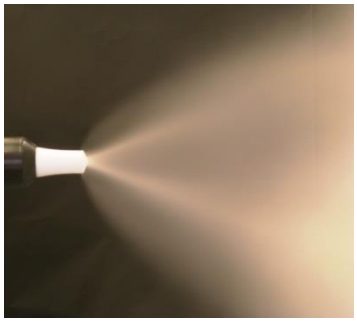

correct powder cloud

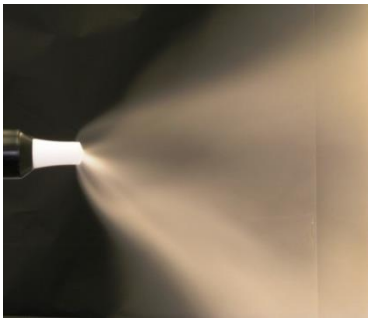

too little total air

Setting the powder output

1.

   OR

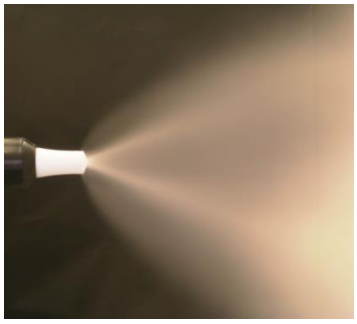

much powder

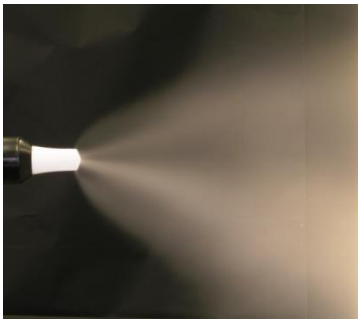

little powder

Adjust the powder output volume (e.g. according to the desired coating thickness)

– Factory default setting of 50% is recommended for initial operation. The total air volume is thereby kept constant automatically by the control unit.

To achieve maximum efficiency, we recommend avoided an overly high powder volume where possible!

2. Check fluidization of the powder in the powder container
3. Point the gun into the booth, switch the gun on and visually check the powder output

Setting the electrode rinsing air

1. Press the key.

   The second display level will be shown.

2.

   Adjust the correct electrode rinsing air according to the applied nozzles (deflector plate, flat jet nozzle)

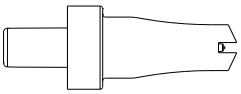

≈ 0.1 Nm³/h

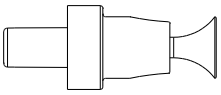

≈ 0.5 Nm³/h

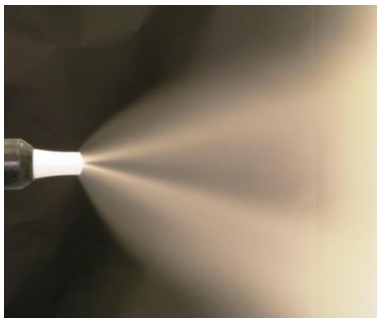

too much electrode rinsing air

3. If in this display level is no operation for 3 seconds, the first display level is switched over independently.

Setting the fluidization

The fluidization can be adjusted on the manual units type B, Q, F, L and S.

The powder fluidization depends on the powder type, the air humidity and the ambient temperature. Fluidizing and vibration start by switching on the control unit.

Procedure:

1. Configure AirMover by opening the ball valve complete and adjusting with the flow control valve (equipment type F only)
2. Open the powder container cover (equipment type F only)
3. Press the key

   The second display level will be shown
4.

   Adjust the fluidizing air with the keys **T5/T6**

   – If in this display level is no operation for 3 seconds, the device switches back to the first display level

   – The powder should only be touched gently, but should be "cooked" regularly and is also to be stirred using a rod
5. Close again the cover

Rinsing mode

The rinsing mode enables blowing off powder accumulations in the powder hose.

Activating the rinsing function

Manual equipment without optional PowerClean module (system parameter P01=0)

The rinsing mode can only be activated from standby mode (main menu display, no powder conveying).

! **On manual coating equipment type F, the injector must be disconnected prior to cleaning procedure, on type B, the suction unit must be lifted, and on type S, the powder container must be empty.**

1. Detach the injector

2.

OR

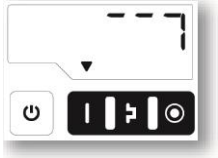

3. **START =**

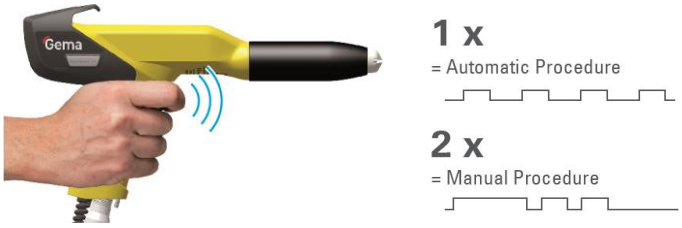

Procedure	Effect
Automatic (automatic)	– The rinsing process is started – Injector, powder hose, gun and spray nozzle are purged using compressed air – The PowerClean function enables parallel cleaning of other components, such as the fluid intake unit, powder container, etc. – The rinsing mode is exited if the automatic rinsing sequence has finished.
Manual (manual)	The operator controls the number and length of the PowerClean impulse by pressing the gun trigger a second time

4. **STOP =**

OR

OR the cleaning mode is terminated automatically.

After completion of the PowerClean procedure, the controller switches back to coating mode.

Manual equipment with optional PowerClean module (system parameter P01= 1 or P01=2)

The rinsing mode can only be activated from standby mode (main menu display, no powder conveying).

1.

OR

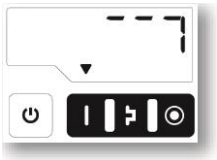

2. **START =**

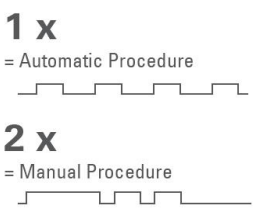

Procedure	Effect
Automatic (automatic)	– The rinsing process is started – Injector, powder hose, gun and spray nozzle are purged using compressed air – The PowerClean function enables parallel cleaning of other components, such as the fluid intake unit, powder container, etc. – The rinsing mode is exited if the automatic rinsing sequence has finished.
Manual (manual)	The operator controls the number and length of the PowerClean impulse by pressing the gun trigger a second time

3. **STOP =**

OR

OR the cleaning mode is terminated automatically.

After completion of the PowerClean procedure, the controller switches back to coating mode.

Setting the background illumination

1. Press the key

   The display switches to the following level:

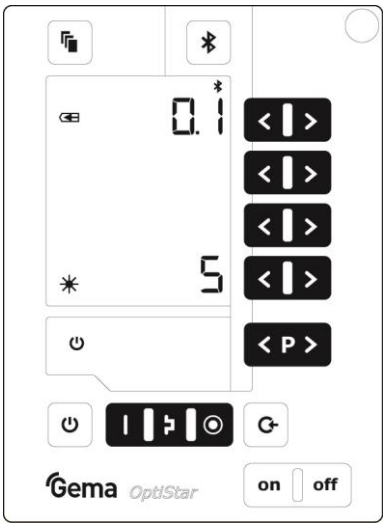

2.

   Select the desired brightness

Color change

General information

When a color change takes place, the individual components of the manual coating equipment must be cleaned carefully. All powder particles of the former color must be removed during this process!

The following describes an 'extreme' color change (light to dark).

1. End the coating procedure
2. Remove the injector from the suction tube
3. The rinsing mode can be activated either on the rear of the powder gun (remote control) or on the control unit
4. Point the gun into the booth
5. Press the gun trigger
   - The rinsing process is started
6. Clean the powder hose:
   - Disconnect the powder hose from the hose connection on the injector
   - Point the gun into the booth
   - Blow through the hose manually with a compressed air gun
   - Connect the powder hose again to the hose connection on the injector
7. Dismantle and clean the powder gun (see therefore the user manual of the powder gun)
8. Clean the injector (see therefore the injector user manual)
9. Disconnect the fluidizing air supply
10. Remove cover, purge with compressed air and clean with a clean, dry brush and cloth
11. Clean the suction tube
12. Empty remaining powder into a container
13. Vacuum up the hopper and in particular the bottom
14. Clean container with a cloth
15. Reassemble the powder hopper
16. Fill with new powder
17. Prepare the manual coating equipment with new powder for start-up

Decommissioning / Storage

Decommissioning

1. End the coating procedure
2. Switch off the control unit

▶ **The adjustments for high voltage, powder output volume and electrode rinsing air remain stored.**

If in disuse for several days

1. Separate from power mains
2. Clean guns, injectors and powder hoses (see therefore the corresponding user manuals)
3. Turn off the compressed air main supply

Storage conditions

Hazard notes

There is no danger to personnel or the environment if the unit is stored properly.

Type of storage

For safety reasons, the product should only be stored in a vertical position.

Storage duration

If the physical conditions are maintained, the unit can be stored indefinitely.

Space requirements

The space requirements correspond to the size of the product.

There are no special requirements concerning distance to neighboring equipment.

Physical requirements

Storage must be inside a dry building at a temperature between +5 and +50 °C. Do not expose to direct sunlight.

Maintenance during storage

Maintenance schedule

No maintenance schedule is necessary.

Maintenance works

During long-term storage, periodically perform a visual check.

Maintenance / Repairs

General information

The product was designed for a maintenance-free operation.

ATTENTION

Any unauthorized modifications and alterations to the product are not permitted for safety reasons and exclude the manufacturer's liability for any resulting damage!

▶ **Regular and conscientious cleaning and maintenance increase the service life of the product and ensure consistent high coating quality!**

– The parts to be replaced during maintenance work are available as spare parts. These parts can be found in the appropriate spare parts list!

Interval

Daily maintenance

1. Clean the injector (see therefore the user manual of the OptiFlow injector)
2. Clean the powder gun (For more on this, please also review the user manual for the OptiSelect GM03 manual powder gun)
3. Clean the powder hose; Please also review the section "Color change"

Weekly maintenance

1. Clean powder container, injector, rinsing module** and powder gun.
2. Check the control unit grounding connections to the coating booth, the suspension devices of the work pieces, or the conveyor chain

If in disuse for several days

1. Separate from power mains
2. Clean the coating equipment
3. Turn off the compressed air main supply

Powder hose rinsing

If longer downtimes take place, the powder hose has to be cleaned.

Procedure:

1. Disconnect the powder hose from the hose connection on the injector
2. Point the gun into the booth
3. Blow through the hose manually with a compressed air gun
4. Connect the powder hose again to the hose connection on the injector

Gun maintenance

The gun is designed to require only a minimum amount of maintenance.

1. Clean the gun with dry cloth, see chapter "Maintenance"
2. Check connection points to powder house.
3. Replace the powder hoses, if necessary.

Cleaning

⚠ CAUTION

Large dust formation possible!

If no dust mask or one of an insufficient filter class is worn when cleaning the product, then the dust that is stirred up from the coating powder can cause respiratory problems.

- ► The ventilation system must be turned on for all cleaning work.
- ► A dust mask corresponding to filter class FFP2 or N95 at minimum must be worn during any cleaning work.

Gun cleaning

ATTENTION

Impermissible solvents

The following solvents may not be used to clean the gun:

- ► Ethylene chloride, acetone, ethyl acetate, methyl ethyl ketone, methylene chloride, premium gasoline, turpentine, tetrachloromethane, toluene, trichloroethylene, xylene!

► **Only cleaning agents with a flash point of a least 5 Kelvin above the ambient temperature, or cleaning places with technical ventilation are allowed!**

! **Before cleaning the powder gun, switch off the control unit. The compressed air used for cleaning must be free of oil and water!**

Daily:

1. Blow off the outside of the gun and wipe, clean etc.

Weekly:

2. Remove powder hose
3. Remove the spray nozzle from the gun and clean it with compressed air
4. Blow through the gun with compressed air, beginning from the connection in flow direction
5. Blow through the gun with compressed air, beginning from the connection in flow direction
6. Clean the integrated gun tube with the brush supplied if necessary
7. Blow through the gun with compressed air again
8. Clean the powder hose
9. Reassemble the gun and connect it

Cleaning the powder container

ATTENTION

Damage to the fluidizing plate

► Never clean the powder container with solvents or water!

1. Disconnect the fluidizing air supply
2. Remove the injector
3. Remove PowerClean module**
4. Remove the cover, blow out with compressed air and clean with a clean dry brush and cloth
5. Clean the injector and suction intake pipe (Please review injector manual for more on this)
6. Clean rinsing module**
7. Empty remaining powder into a container
8. Vacuum up the hopper and in particular the bottom
9. Clean container with a cloth
10. Reassemble the powder hopper

► **Do not refill the powder container until just before the next use!**

Repair work

In the event of malfunctions or faults, the product must be checked and repaired by an authorized Gema service workshop. The repairs must only be performed by an authorized specialist.

Improper tampering can result in serious danger for user and equipment.

Periodic checks

The periodic checks include examining all connecting cables and hoses.

The corresponding parts should be replaced immediately if any damage to cables or hoses is discovered.

All plugs must be properly tightened.

Fault clearance

Prior to any troubleshooting measures, always check whether the equipment parameter (P00) as configured in the control unit is correct

► See operating instructions for the manual gun control unit, Chapter "Initial Start-up – Setting Equipment Type"!

Incident	Causes	Corrective action
H11 (Help code on control unit)	Gun not connected	Connect the gun
	Gun plug or gun cable defective	Contact local Gema representative
	Remote control on powder gun defective	Contact local Gema representative
Control unit displays remain dark, although the control unit is switched on	Control unit is not connected to the mains	Connect the equipment with the mains cable
	Power pack fuse defective	Replace the fuse
	Power pack defective	Contact local Gema representative
Gun LED remains dark, although the gun is triggered	High voltage adjustment is set too low	Increase high voltage
	Gun plug or gun cable defective	Contact local Gema representative
	LED on gun defective	Contact local Gema representative
Powder does not adhere to object, although the gun is triggered and sprays powder	High voltage and current deactivated	Check the high voltage and current setting
	High voltage cascade defective	Contact local Gema representative
	The objects are not properly grounded	Check the grounding
The gun does not spray powder, although the control unit is switched on and the gun trigger is pressed	Compressed air not present	Connect the equipment to the compressed air
	Injector or nozzle on the injector, powder hose or powder gun clogged	Clean the corresponding part
	Insert sleeve in the injector is clogged	Clean/replace
	Fluidization not running	see below

Incident	Causes	Corrective action
	Pressure valve in the control unit defective	Replace
	Solenoid valve in the control unit defective	Replace
	No conveying air: – Throttle motor defective – Solenoid valve defective	Contact local Gema representative
	Front plate defective	Contact local Gema representative
Gun achieving only poor spray profile	Total air incorrectly configured	Increase the powder quantity and/or total air volume on the control unit
	Bend or damage to air lines to injector	Check air lines to injector
	Insert sleeve in the injector worn or not inserted	Replace or insert it
	Fluidization not running	see below
No electrode rinsing air	Rinsing air throttle motor defective	Contact local Gema representative
The powder is not fluidized	Compressed air not present	Connect the equipment to the compressed air
	Fluidizing air is set too low on the control unit	Set the fluidizing air correctly
	Throttle motor defective	Contact local Gema representative
Powder flows out of the powder hopper	Airmover pressure incorrectly set	Adjust

Disposal

Introduction

Requirements on personnel carrying out the work

The disposal of the product is to be carried out by the owner or operator.

When disposing of components that are not manufactured by Gema, the instructions in the respective manufacturer's documentation must be observed.

Disposal regulations

!

The product must be disassembled and disposed of properly at the end of its service life.

► When disposing of the product, the applicable local and regional laws, directives and environmental regulations must be complied with!

Materials

The materials must be sorted according to material groups and taken to the appropriate collection points.

Spare parts list

Ordering spare parts

When ordering spare parts for powder coating equipment, please indicate the following specifications:

– Type and serial number of your powder coating equipment

– Order number, quantity and description *of* each spare part

Example:

– **Type** OptiGun GA03 automatic powder gun

Serial number 1234 5678

– **Order no.** 203 386, 1 piece, Clamp – Ø 18/15 mm

When ordering cable or hose material, the required length must also be given. The spare part numbers of this bulk stock is always marked with an *****.

Wearing parts are always marked with a #.

All dimensions of plastic hoses are specified with the external and internal diameter:

Example:

Ø 8/6 mm, 8 mm outside diameter (o/d) / 6 mm inside diameter (i/d)

ATTENTION

Use of non-original Gema spare parts

When using the spare parts from other manufacturers the explosion protection is no longer guaranteed. If any damage is caused by this use all guarantee claims become invalid!

► Only original Gema spare parts should be used!

OptiFlex Pro K – Spare parts list

1	OptiStar CG21 gun control unit – complete (see corresponding operating manual)	
2	OptiSelect Pro GM04 Manual powder gun – complete (see corresponding user manual)	
3	OptiFlow IG07 injector – complete (see corresponding user manual)	
4	Pneumatic connection for supplementary air	
4.1	Quick release connection – NW5, Ø 8 mm, black	261 637
4.2	Nut with kink protection – M12x1 mm, Ø 8 mm	201 316
4.3	Plastic tube – Ø 8/6 mm, black	1008 038*
5	Pneumatic connection for conveying air	
5.1	Quick release connection – NW5, Ø 8 mm, red	261 645
5.2	Nut with kink protection – M12x1 mm, Ø 8 mm	201 316
5.3	Plastic tube – Ø 8/6 mm, red	103 500*
6	Kink protection	1008 844
7	Locknut – PG21	234 869
8	Suction tube – complete, L=504 mm (incl. pos. 9)	1009 063#
9	O-ring – Ø 28.3x1.78 mm	224 987
10	Pneumatic group – complete (see corresponding spare parts list)	
11	Quick release connection – NW7.8 – Ø 10 mm	239 267
12	Hose clamp – Ø 15-18 mm	203 386
13	Plastic tube – Ø 8/6 mm, black	103 152*
14	Grounding cable – complete	301 140
15	Powder hose – dia. 15/10 mm	1001 673*#
16	Spare parts kit – consisting of:	
	Cartridge – complete (1x)	1016 561
	O-ring – Ø 16x2 mm (2x)	1007 794
	Multi-Tool for OptiFlow IG07 (1x)	1017 201
	Cable tie (6x)	200 719
17	Power cable – country-specific (not shown)	
18	Short instructions (not shown)	1017 907
19	Operating instructions (not shown)	1017 997

***** Please indicate length # Wearing part

OptiFlex Pro K – Spare parts

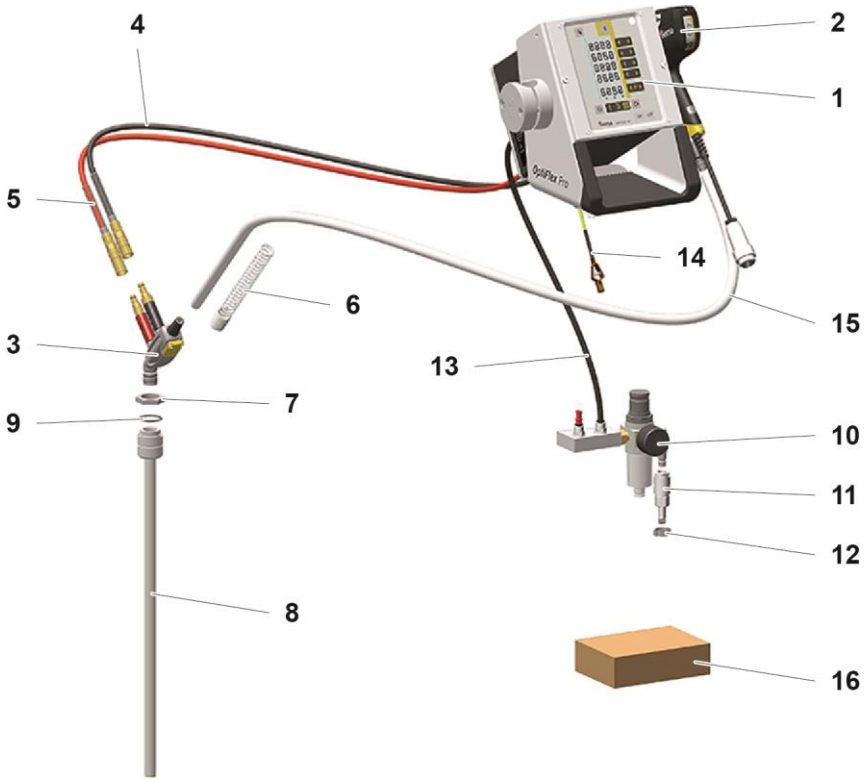

fig. 8:

Pneumatic group

	Pneumatic group – complete	1017 815
1	Filter cartridge – 20 µm	1008 239#
2	Condensate container with drain valve	1008 238
3	Connector – NW7.4 - 1/4"	256 730
4	Elbow joint – 1/4"-1/4"	222 674
5	Sealing plug – 1/8"	203 297
6	R/F unit – 0-8 bar, 1/4", complete (incl. pos. 1 and 2)	1008 236
7	Double nipple – 1/4"1/4", divisible	261 165
8	Pressure gauge – 0-10 bar, 1/8"	1008 049
9	Distribution block	1017 816
10	Screw-in nipple – 1/4", Ø 8 mm	265 136
11	Plug – Ø 8 mm	238 023

Wearing part

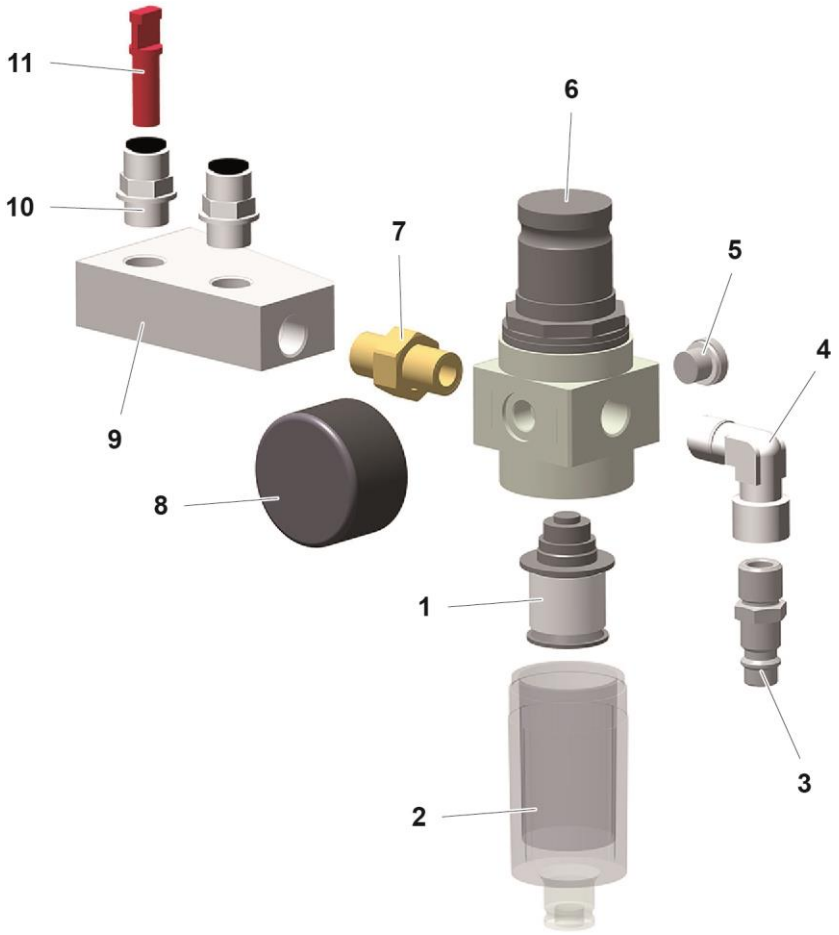

fig. 9: Pneumatic group

PowerClean module set**

	PowerClean module set – rinsing air hose length 2 m (pos. 1, 2, 3, 4 - 7)	1010 519
	PowerClean module set – rinsing air hose length 12 m (pos. 1, 2, 3.1 – 7)	1010 520
1	PowerClean module** – complete (See operating instructions OptiSelect Pro GM04 manual powder gun)	1009 528
2	Solenoid valve – complete	1009 928
3	PowerClean module cable – complete, length 1 m	1009 879
3.1	PowerClean module cable – complete, length 15 m	1009 880
4	Quick release connection – NW5-Ø 8 mm	1008 027
5	Plastic tube – Ø 8/6 mm, black	103 152*
6	O ring – Ø 16x2 mm, NBR70, anti-static (2x) (not shown)	#
7	Cable tie (not shown)	

***** Please indicate length

Wearing part

*fig. 10: PowerClean module set***

Index

A

About these instructions 7
Assembly 23

B

Basic safety instructions 9

C

Cleaning 43
Connectable guns 19
Connection 23

D

Decommissioning 39
Dimensions 20
Disposal 47
Disposal regulations 47
Disuse for several days 39

E

Electrical data 19
Environmental conditions 21

F

Fault clearance 45
Figure references in the text 8

I

Intended use 15

M

Maintenance 41
Maintenance during storage 40

O

Operation 29

P

Periodic checks 44
Pictograms 7
Pneumatic data 19
Powder output (reference values) 20
PowerClean™ module 17
Presentation of the contents 8
Product description 15
Product specific security regulations 10

R

Rating plate 22
Repair work 44
Repairs 41

S

Safety 9
Safety symbols 7
Sound pressure level 22
Spare parts list 49
Start-up 27
Storage 39