E

Operating Instructions and Spare Parts List

ZA 1-.. Reciprocator

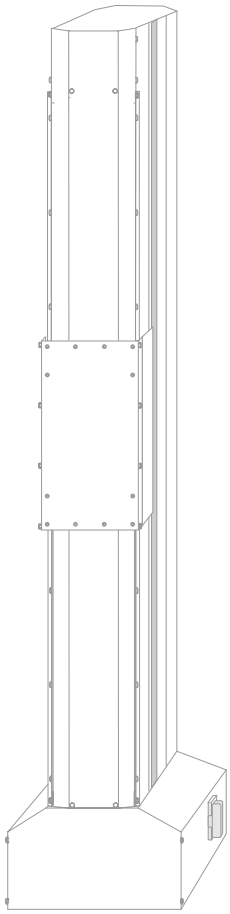

TWGema

Issued 10 / 98

Table of Contents

Issued 10 / 98

Safety Rules

1. *The ZA 1 Reciprocator should only be started up after carefully reading this operating manual. Incorrect setting of the PRC Control unit and the ZA 1 Reciprocator can cause accidents, damage, and faulty operation to the equipment.*
2. **The (motor drive) power of the axis is very much stronger than that of any human being!**
   The axis must be made inaccessible during operation (see local safety regulations). When *the reciprocator is switched off the carriage can fall to the lowest reversing point under its own weight, therefore, never stand under the carriage when the reciprocator is switched off.*
3. The plugs and sockets of the PRC control module, power unit, and the ZA 1 Reciprocator should only be unplugged when the control module is *disconnected* from the Mains.
4. The connecting cables between the control unit and the reciprocator must be laid out so that they cannot be damaged during operation of the axis. All movable hoses and cables must also be laid out so that they are neither subjected to any excessive loads nor hang on other parts, even when the reciprocator is at the maximum height of its stroke. *Please observe local safety regulations.*
5. The upper stroke limit must always be set according to the **maximum height** of the reciprocator. If the *wrong stroke height* is set (too high/low) this can cause damage to the booth and/or the reciprocator.
6. When replacing spare parts or carrying out repairs the PRC Control unit must be disconnected from the Mains according to local safety regulations.
7. **Only** original ITW Gema Spare Parts should be used. Use of spare parts from other manufactures *will invalidate* the ITW Gema guarantee conditions.

Technical data for the ZA 1-.. Reciprocator

Overall height :	ZA 1-12 - 2.35 m ZA 1-17 - 2.85 m ZA 1-22 - 3.35 m ZA 1-27 - 3.85 m
Length of stroke :	ZA 1-12 - variable up to 1.2 m ZA 1-17 - variable up to 1.7 m ZA 1-22 - variable up to 2.2 m ZA 1-27 - variable up to 2.7 m

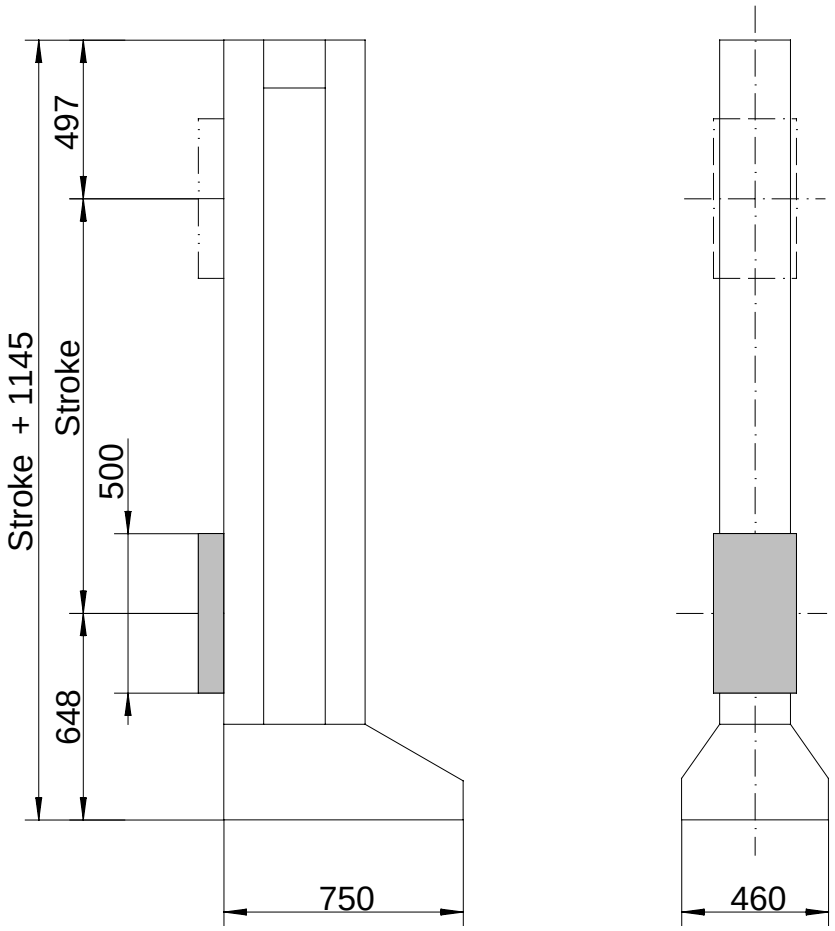

Transport trolley

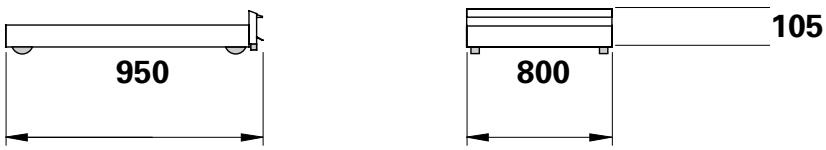

Technical Data for the ZA 1 Reciprocator

Load :	max. 50 kg
Speed of stroke :	0.05 to 0.6 m/sec.
Acceleration :	1.5 m/sec^2
Drive :	DC motor
Stroke detection :	Incremental Pulse Generator
Reference point :	Proximity switch
Type of protection :	IP 54
Control unit :	PRC 2 or PRC 3

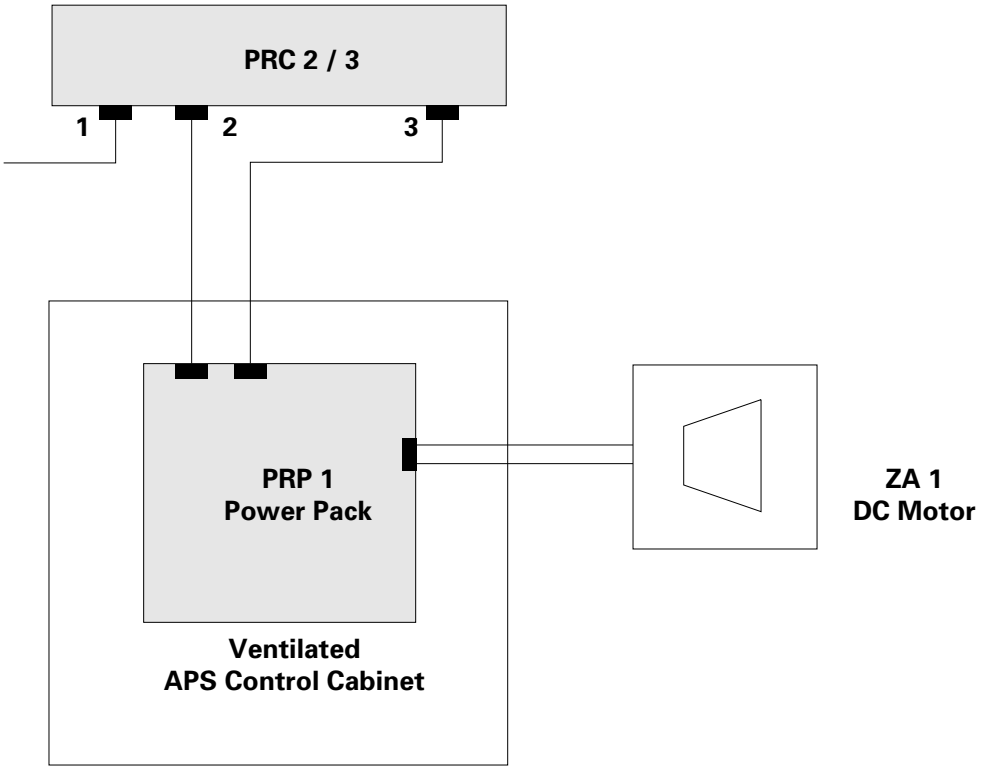

1 Mains connection
2 Connection to PRP 1
3 Control signal

Issued 10 / 98

Description of the ZA 1-.. Reciprocator with DC motor

1. Description of function

1.1 Special characteristics :

- 50 kg Automatic gun, and gun holder carrying capacity.
- Built-in short circuit brake.
- High speed, maximum acceleration and braking.
- Safer operation, and simpler maintenance.
- High efficiency due to low energy consumption.
- Designed for continuous operation.
- Mobile version available.
- IP 54 type protection.
- Four standard stroke heights available : 1.2 m, 1.7 m, 2.2 m, and 2.7 m.

The ITW Gema ZA 1 Z Axis Reciprocator is conspicuous because of its rugged construction, a new drive system, and an improved carriage design.
Quiet running, high acceleration and braking, as well as a built-in short circuit brake are some of the important improvements.

Before the reciprocator is put into operation the *upper stroke limit* must be set on the PRC Powder Reciprocator Control (see PRC Operating manual).

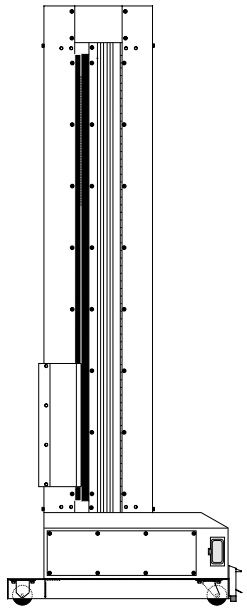

ZA 1-.. mounted on a transport trolley (Side view)

Figure 1

Attention !! **Before starting the reciprocator please read these instructions carefully !!**

Attention !! **Before the reciprocator is put into operation the *upper stroke limit* must be set on the PRC Powder Reciprocator Control.**

Issued 10 / 98

1.2 Description of the ZA 1-.. Reciprocator

(The bold figures in the text below refer to Figure 2, page 3).
The ZA 1-.. Reciprocator was designed for powder coating with automatic powder guns. The reciprocator carriage travels perpendicularly on the column. The reciprocator carriage can carry a maximum weight of 50 kg (automatic powder guns, and gun holders etc.) in the vertical (Z) axis. The movement sequences (stroke, and stroke speed) are controlled by the PRC Control unit.
The ZA 1 Reciprocator is used to move the automatic powder gun(s) in the vertical (Z) axis. The saddle plate (**5**), for mounting the gunholder(s), is the front of the Z axis carriage (**9**). The carriage (**9**), balanced by a counterweight (**11**) on the toothed belt, moves up and down on a set of rollers inside the vertical column (**2**). The inside of the column panels are the roller tracks. The vertical carriage (**9**) and the counterweight (**11**) are driven by a toothed belt (**3**) over a worm gear (**6**), which in turn is driven by a DC motor (**8**). The motor is fitted with an incremental pulse generator for monitoring the motor positioning. The counterweight (**11**) moves up and down inside the column, passing through the *inside* the carriage in the opposite direction to the Z Axis carriage travel. The toothed drive belt passes over a toothed drive wheel running on pedestal bearings (**1**) at the top of the vertical column.
All electrical connections to the reciprocator are made through the 16 pole socket (**7**) located on the column base housing.

On start-up the carriage always travels to the Reference point (50 mm above the lowest reversing point, see Reference point, page 6).
After the reference point is reached the reciprocator begins to carry out the movements set on the control unit.

Before starting operation the **upper stroke limit of the reciprocator must be set** on the PRC control unit (see the PRC Powder Reciprocator Control operating instruction manual).

Attention !! **Incorrect setting of the upper stroke limit can cause damage to the booth and/or the reciprocator.**

ZA 1-.. Reciprocator (with the carriage at its lowest point)

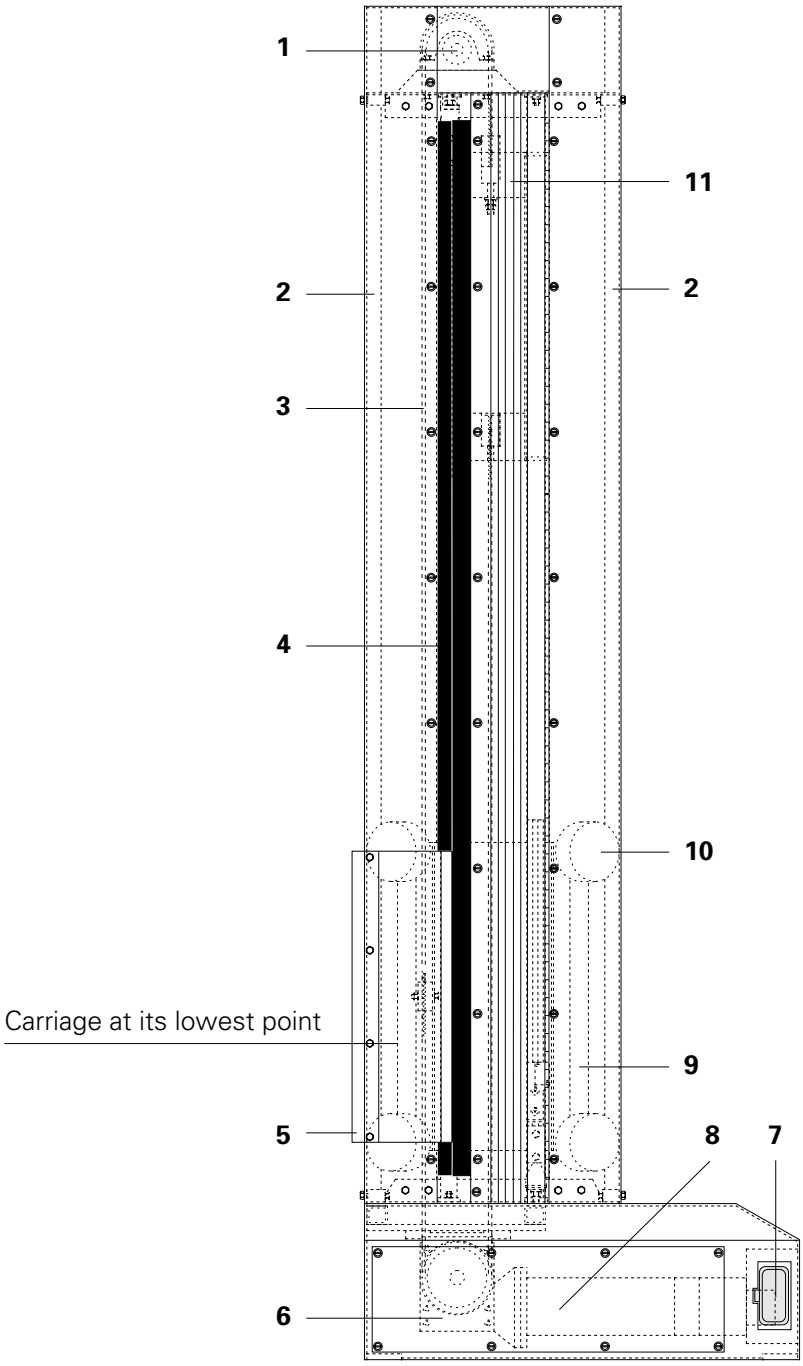

1. Pedestal bearings
2. Vertical column panels
3. Toothed drive belt
4. Rubber sealing strips
5. Saddle plate
6. Worm drive
7. 16 pole input socket
8. DC motor (with pulse/tacho generators)
9. Z Axis carriage
10. Rollers
11. Counterweight

Figure 2

2. Preparation for Start-up

2.1 Before Starting up

Attention !! **Before starting work, make certain that nobody can switch the reciprocator on. ALWAYS unplug the reciprocator first.**

Before starting-up the following checks should be made :

- Check that the gun and powder hose mounts are firmly fitted.
  (Mount the gun holders so that they do not hit the bottom of the booth slots on start-up and cause damage).
- Lay out the cables and hoses so that even at the highest stroke no strain can arise.
- Make sure that no guns can collide with the workpieces.
- Check the grounding of the guns and hose carriers.
- Check that the proximity switch is in the correct position and screwed tight. The stroke of the carriage must be within the height of the gun slots of the booth (**Danger of collision**).
- Make sure that automatic guns cannot collide with workpieces (Incorrectly set stroke parameters on the PRC control unit).
- Check the play of the Z Axis carriage manually, if necessary reset the rollers (see page 14).
- Check the rubber sealing strips on both sides of the vertical column doors for damage and/or wear.
- When the carriage is loaded with over 30 kg (Guns, gun holders etc.), an additional 30 kg counterweight must be fitted.

2.2 Before switching the reciprocator on

Before switching the reciprocator on the following checks should be made :

- Check that the cables and hoses are laid out correctly.
- Check that the guns have a clear run and do not touch the booth slots.
- Check the distance between the guns and workpieces.

Attention !! **Carefully read through this operating manual *before* starting up or switching on the reciprocator.**

2.3 Grounding

All metal parts of the reciprocator must be satisfactorily grounded (metal-to-metal) according to local safety regulations. The guns holders must also be connected to the grounding connection on the reciprocator base.

2.4 Hoses and Cables

All movable hoses and cables must be laid out so that they are neither subjected to any loads nor can hang on other parts even when the reciprocator is at maximum stroke. The cables of the drive etc. must also be laid out so that they cannot be damaged.

2.5 Protective system

Electrical components are in accordance with IP 54 Type Protection (according to VDE *(German Electrical Society)* regulations).

2.6 Reference Point

When the reciprocator is switched on the carriage automatically travels to the Reference point (*Proximity switch*). The reciprocator control is programmed that the reference point is *always* 50 mm ***above*** the lower reversing point.

The ZA 1 Reciprocator is delivered with the buffer stop, and carriage set at the lowest point of the slide for shipping purposes only.

Attention! **In order not to damage the booth or gun holders, etc. the reference point must be set before S*tart-up* takes place.**

Setting the Reference point :

1. Set the proximity switch in the required position
2. Set the activating stroke of the reference point proximity switch to approximately 2 mm.
3. Set the rubber buffer stop in a position (50 mm below the proximity switch), relative to the lower edge of the booth gun slot, so that the proximity switch functions as a safety switch.

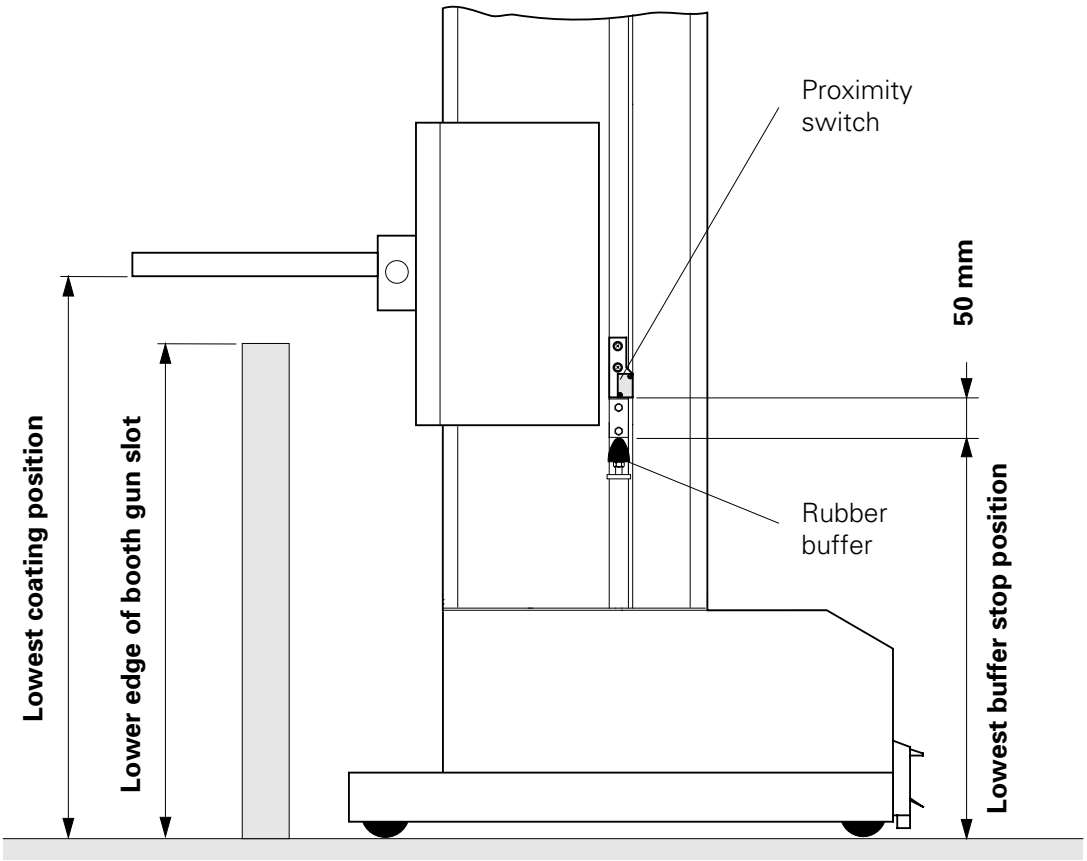

Figure 3

3. Maintenance

3.1 General

Attention !! **Before carrying out maintenance work always make certain that *nobody* can operate the reciprocator.**

The ZA 1-.. Reciprocator was designed to operate with a minimum of maintenance. The worm gear drive of the DC motor is self-lubricating and practically maintenance-free.

Regular maintenance and inspection of the reciprocator increase the operating safety and can help to reduce wear and tear, and repair down-time, etc.

- Blow off with compressed air or wipe down the *outside* of the reciprocator with a soft cloth at least once a week. Clean the inside of the reciprocator column, especially the roller tracks and counterweight, with a vacuum cleaner.

3.2 DC Drive unit - Worm gear

Attention !! **For safety reasons the following maintenance work *should always be carried out by two people.***

The worm gear drive of the DC motor is self-lubricating and practically maintenance-free.

- **Take note of the external contamination of the housing !**
  Heavy external contamination can cause an increase in the operating temperature of the motor! Clean the drive unit from time to time (with a vacuum cleaner).
  Do not use compressed air on the *inside* of the vertical column.
- Check the motor of the drive unit once a month for lose of oil.

Replacing the worm gear unit :
- When it is necessary to replace a worm gear drive unit the DC Servomotor must be dismantled from the reciprocator base. Before this can be done the tension of the toothed belt must be released and the counterweight and toothed belt removed from the toothed drive wheel. Now the worm gear drive can be removed.

3.2 DC Drive Unit : DC Servomotor

The DC drive motor (**5** - Fig. 5, page 9) is fitted with a pulse generator (**7** - Fig. 5, page 9) so accurate positioning, and reversing positions of the axis are guaranteed.

Motor / Tachogenerator replacement :

The motor / tachogenerator are fitted at the factory as a unit and can only be replaced as such.

- Release the cable from the socket housing (Cannot be released from the motor and tachogenerator).
- Remove the motor from the drive unit.
- Dismantle the incremental pulse generator.

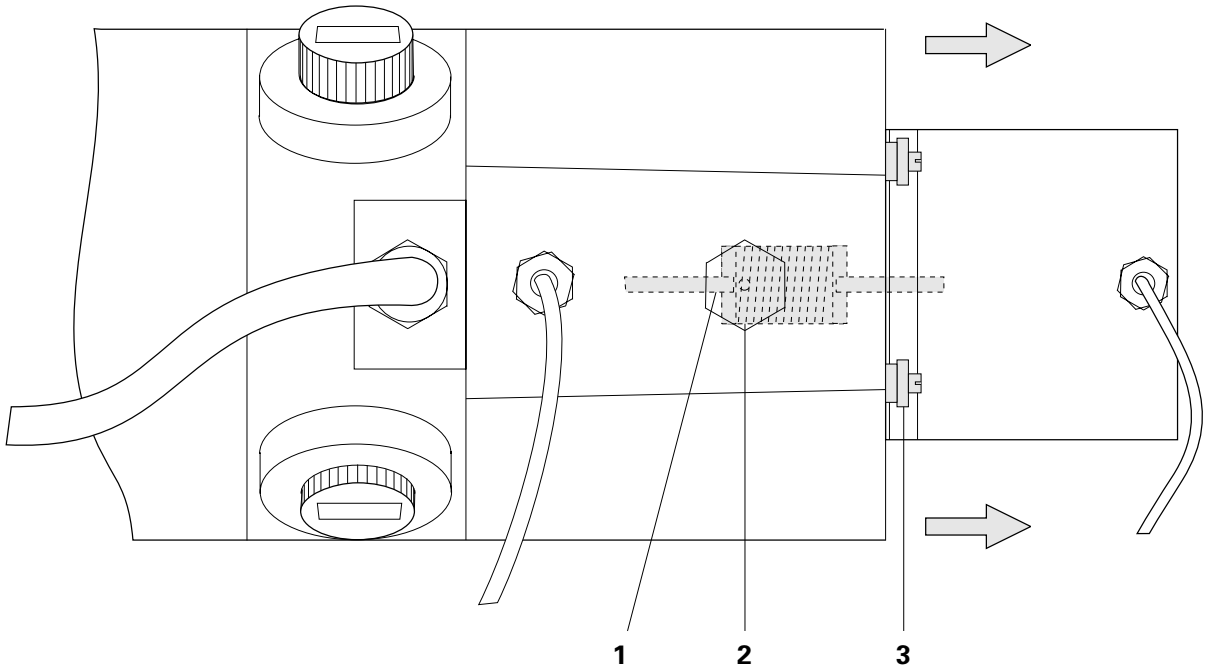

Figure 4

Replacing the incremental pulse generator :

1. Release the incremental pulse generator cable from the socket housing.
2. Unscrew the hexagonal screw (**1**).
3. Turn the motor by hand until the grub screw (**2**) is visible on the motor coupling.
4. Unscrew the grubscrew (**1**) with an Allen key.
5. Unscrew the three screws (**3**) holding the incremental pulse generator and carefully remove the whole unit, including the coupling, from the motor.

Assembly should be done in the reverse order as described above.
The motor coupling should be carefully replaced into the drive shaft of the motor.

Issued 10 / 98

3.2 DC Drive Unit : Replacing the carbon brushes

The carbon brushes (**2**) must be checked from time to time and when they are badly worn they must be replaced. **Badly worn carbon brushes can lead to the destruction of the motor collectors.** Wear on the brushes is dependent on the load, speed, and stroke length.

- The carbon brushes should be checked for wear once a month.
- The carbon brushes are replaced as follows :

1. Remove the cover plates on the left- and right-hand sides of the reciprocator base.
2. Unscrew the four carbon brush caps (**1**) from the carbon brush holder (**6**) with a small coin or a wide-bladed angled screwdriver and remove.
3. Fit the four new carbon brushes in the carbon brush holder (**6**) and replace the caps (**1**).

Always replace all four brushes.

When the motor is defect it can be dismounted and sent complete to a ITW Gema Service Centre.

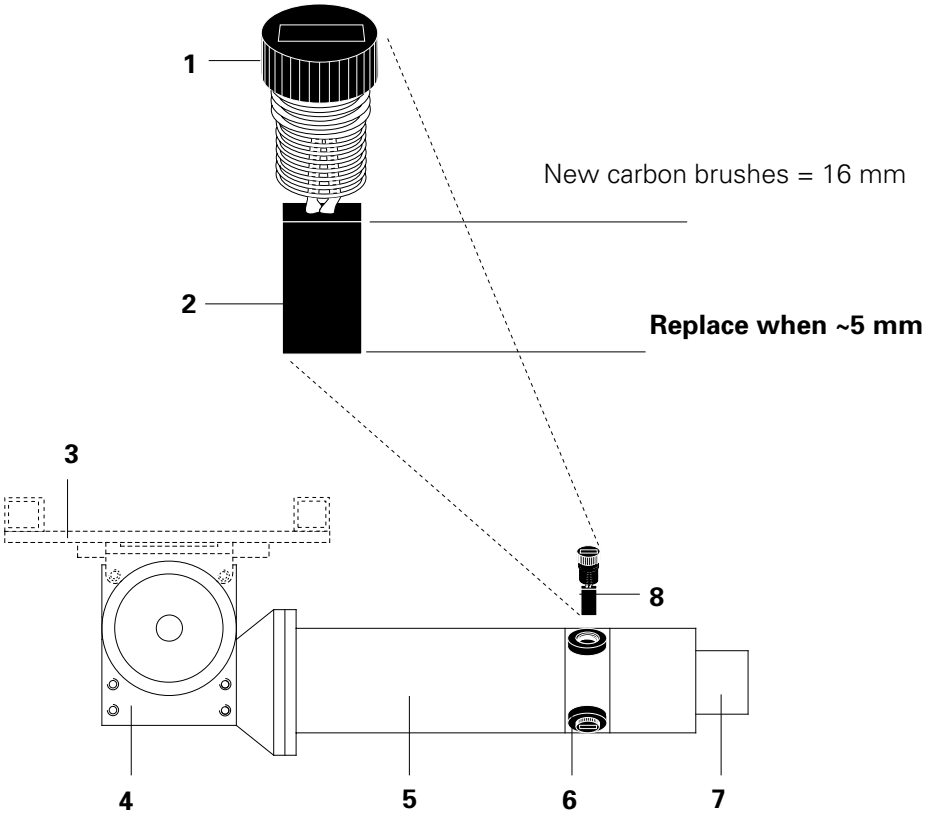

1	Cap	5	DC motor
2	Carbon brush	6	Brush holder
3	DC motor support	7	Pulse generator
4	Worm gear	8	Motor brush (complete)

Figure 5

3.3 Replacing the toothed drive belt

Attention !! **For safety reasons it is always recommended that two people carry out the following operations.**

Before starting the following checks, and maintenance work clean the inside and outside of the reciprocator with a vacuum cleaner.
Do not use compressed air inside the column !!

The toothed drive belt should be checked regularly as it is subjected to a great deal of wear and tear when in operation.

- The toothed belt should be checked once a week for contamination. Powder deposits should be removed with a vacuum cleaner as this can influence the quiet running of the reciprocator and shorten the life of the toothed belt.
- Check the gears for contamination and wear and remove power deposits with a vacuum cleaner.
- Switch on and run the reciprocator to check the Z Axis carriage (**5** - Fig. 7, page 11) for quiet running.
  Check the toothed drive belt (**2** - Fig. 7, page 11) for elongation and/or wear (Noisy running, strong vibration of the belt on reversing direction).

Vertical cross-section of the ZA 1 reciprocator

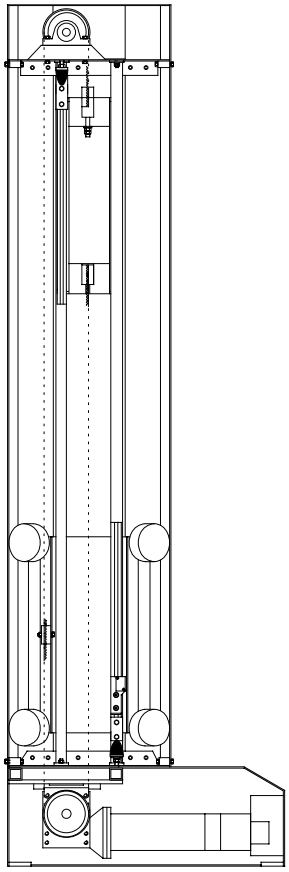

Figure 6

(continued)

3.3 Replacing the toothed drive belt (continued)

Tensioning the toothed belt.

When the toothed belt is tight/loose it can be tightened/loosened with the lock nuts (**6**) on the inside at the top of the counterweight.
When the toothed belt (**2**) is worn or damaged and must be replaced the guns and gun holders must be dismounted from the carriage first.

Replacing the toothed belt :
Preparation :

1. The carriage (**5**) must travel to the bottom position of the column and rest on the rubber buffer (**4**)
2. Secure the counterweight with clamps
3. Remove the gun holders from the carriage plate (**8** - Fig. 8, page 12)
4. Remove the coverplate from the right-hand side (seen from the front) of the reciprocator base for access to the DC motor.
5. Remove the column panel (**5** - Fig. 8, page 12).
6. Dismantle the toothed belt at Position (**1**) :
   - Loosen lock nuts (**8**)
   - Release the belt clamp block (**1**) from the counterweight.
   - Loosen the clamping screws (**12** - Fig. 8, page 12) and remove the toothed belt.

Position (**2**):

- Unscrew the nut (**9** - Fig. 8, page 12) and remove the clamp plate.

Position (**3**):

- Release the belt clamp block (**3**) from the counterweight.
- Loosen the clamping screws (**12** - Fig. 8, page 12) and remove the toothed belt.

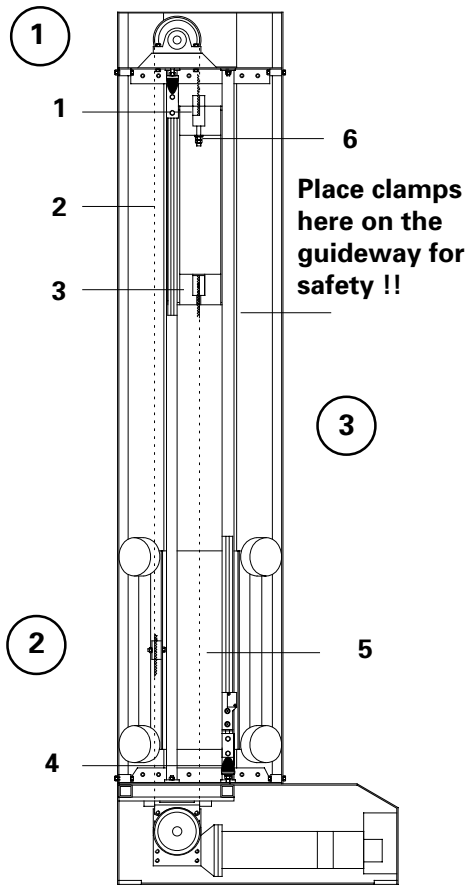

Figure 7

3.3 Replacing the toothed drive belt

Replacing a toothed belt is as follows :

- The new toothed belt is replaced in the reverse order as described on the previous page.
- The toothed drive belt should be carefully tensioned.
  Do not stretch the belt!!
- The toothed belt must not stand out above the clamp plates when seated in the counterweight slot.

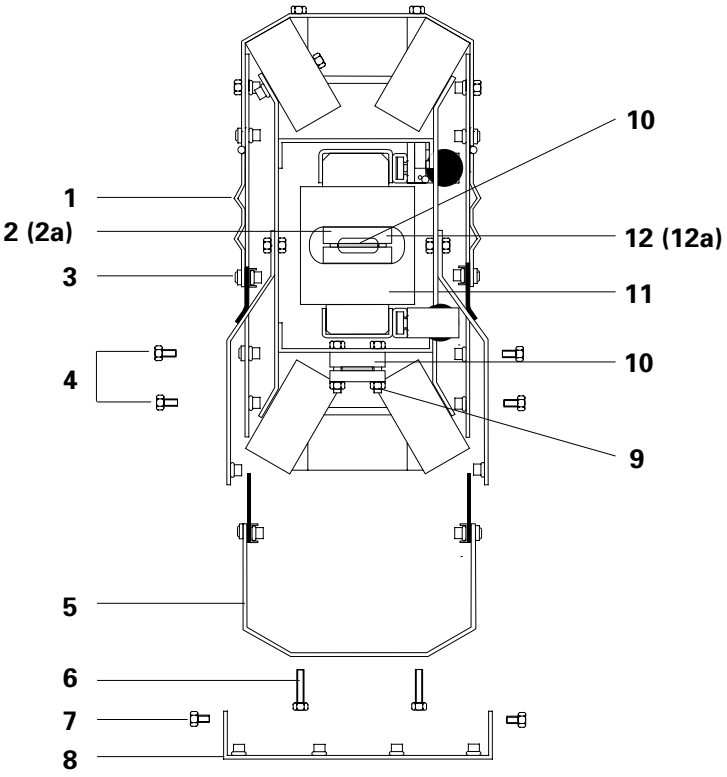

Figure 8

3.4 Replacing the upper toothed gear wheel / Pedestal bearing

The following work should only be carried out by **trained** personnel.

Procedure :

1. Unscrew the screws (**3** - Fig. 8, page 12) holding the doors on the vertical column (**1** - Fig. 8, page 12) and open the doors.
2. The carriage should travel to the lowest reversing point (buffer stop).
3. Place a clamp directly under the counterweight to prevent it from falling down after the toothed belt has been released.
4. Release the upper clamp block (**12/12a** - Fig. 8, page 12) from the counterweight then remove the toothed drive belt from the clamp block.
5. Remove the bolts (**8**) holding the pedestal bearings and lift the bearing block (**7**) off the column.

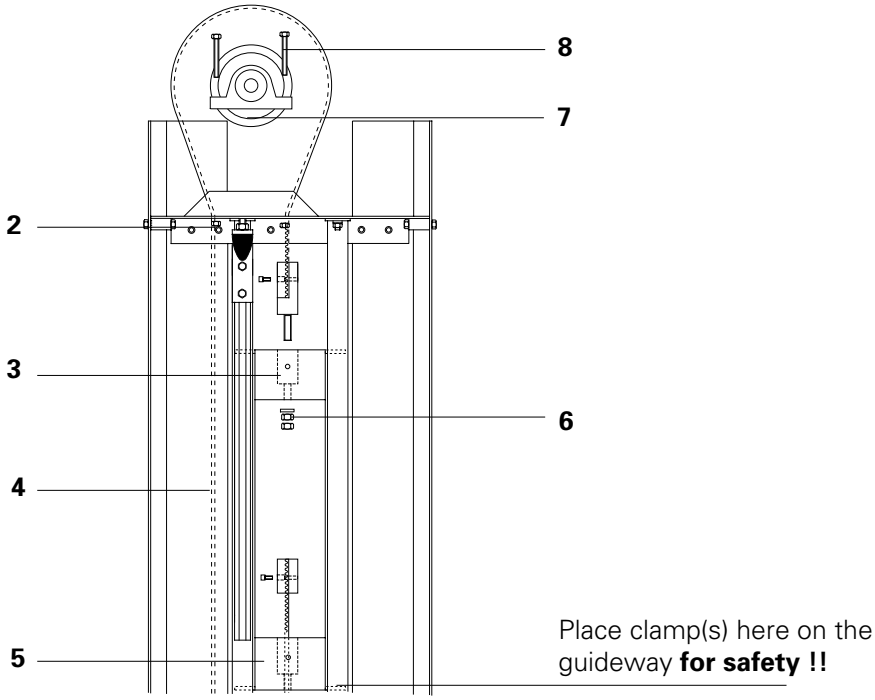

Figure 9

(continued)

3.4 Replacing the upper toothed gear wheel / Pedestal bearing (continued)

6. Remove both pedestals (**10**) from the shaft (**2**), complete with ball races.
   The following is valid for both sides of the shaft :
   Loosen the grubscrew (**11**) a few turns with an Allen key.
   Release the collar (**1**) with a hammer (**14**) and punch (**13**).
   Remove the collar (**1**) from the end of the shaft (**2**).
   Carefully remove the pedestal bearings (**10**) from the shaft (**2**).
   The toothed wheel (**12**) remains on the shaft (**2**).
7. Fit the new pedestal bearings (**10**) carefully on the shaft (**2**).
   Only screw the pedestal bolts (**3**) together lightly (Finger tight).
   Fit the toothed drive belt (**4**) over the toothed wheel (**12**) and slide the clamp plate (**8**) into the upper counterweight slot (**5**).
   Tension the belt by tightening the locking nuts (**6**) on the inside of the counterweight (**7**).
   Let the carriage run slowly up and down the column a few times to allow the bearings to centre themselves.
   Tighten the pedestal bolts (**3**).
   The counterweight (**7**) should move up and down quietly without touching the guideways (**9**) too much.

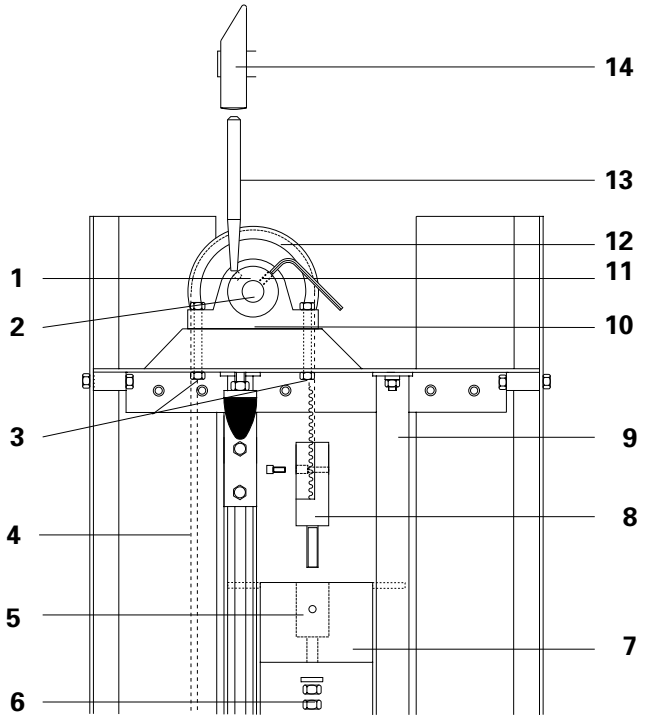

Figure 10

3.5 Adjusting excessive play in the vertical carriage.

Check the Z Axis carriage for excessive vibration when travelling up and down, and at the reversing points, this could be caused by too much play in the carriage.
To achieve the *best result* the carriage should be adjusted with the carriage at the *maximum* stroke reversing points.

Adjust the vertical column front panel (**5**) as follows :

1. Remove the screws (**2**) holding the vertical column doors (**1**).
2. Check the amount of play in the carriage at the upper and lower reversing points.
3. Unscrew the screws (**10 -** *see Fig. 10, page 12*) holding the column cover plate (**1 -** *see Fig. 10, page 12*) and remove.
4. Loosen the upper, and lower side bolts (**4**) holding the vertical column front panel slightly.
5. Tighten the bolts (**6**) at the top and bottom on the *front* of the vertical column panel a little at a time.
6. Check the carriage for play.
   The carriage should run smoothly and quietly. If there is still some play repeat the previous procedure until there is no longer any play.
7. Closed the door panels (**1**) and replace the screws (**2**).
8. Tighten all screws and bolts (except the bolts (**6**) adjusting the front panel, carefully tighten the lock nuts at the back of bolts (**6**) on the inside of the column).

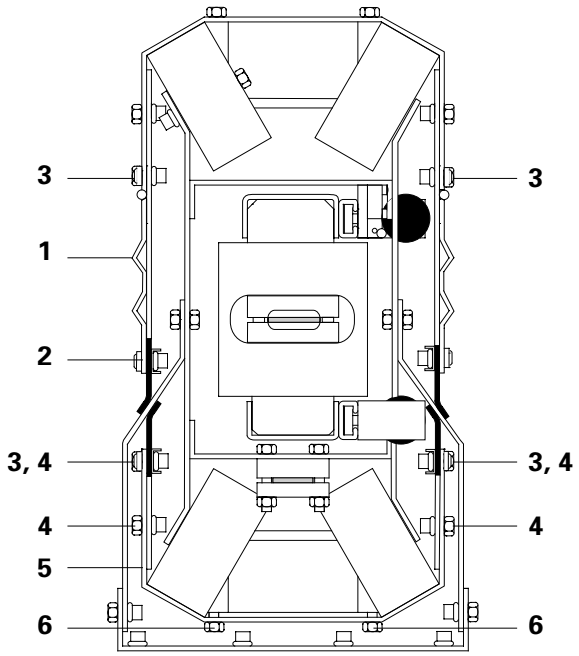

Figure 11

3.6 Check the counterweight guide strips for wear.

The guide strips (**2**) which hold the counterweight in the guideways (**1**) are wear parts.
When the reciprocator runs continuously for a long time with a heavy load, play can occur in the guide strips (Material wear / Deformation).
The guide strips are fitted on the top and bottom of the counterweight and prevent it from touching the guideways. When the guide strips are worn out they must be replaced so as not to cause abrasive damage to the metal parts of the guideways and counterweight.

Horizontal cross-section of the ZA 1 vertical column

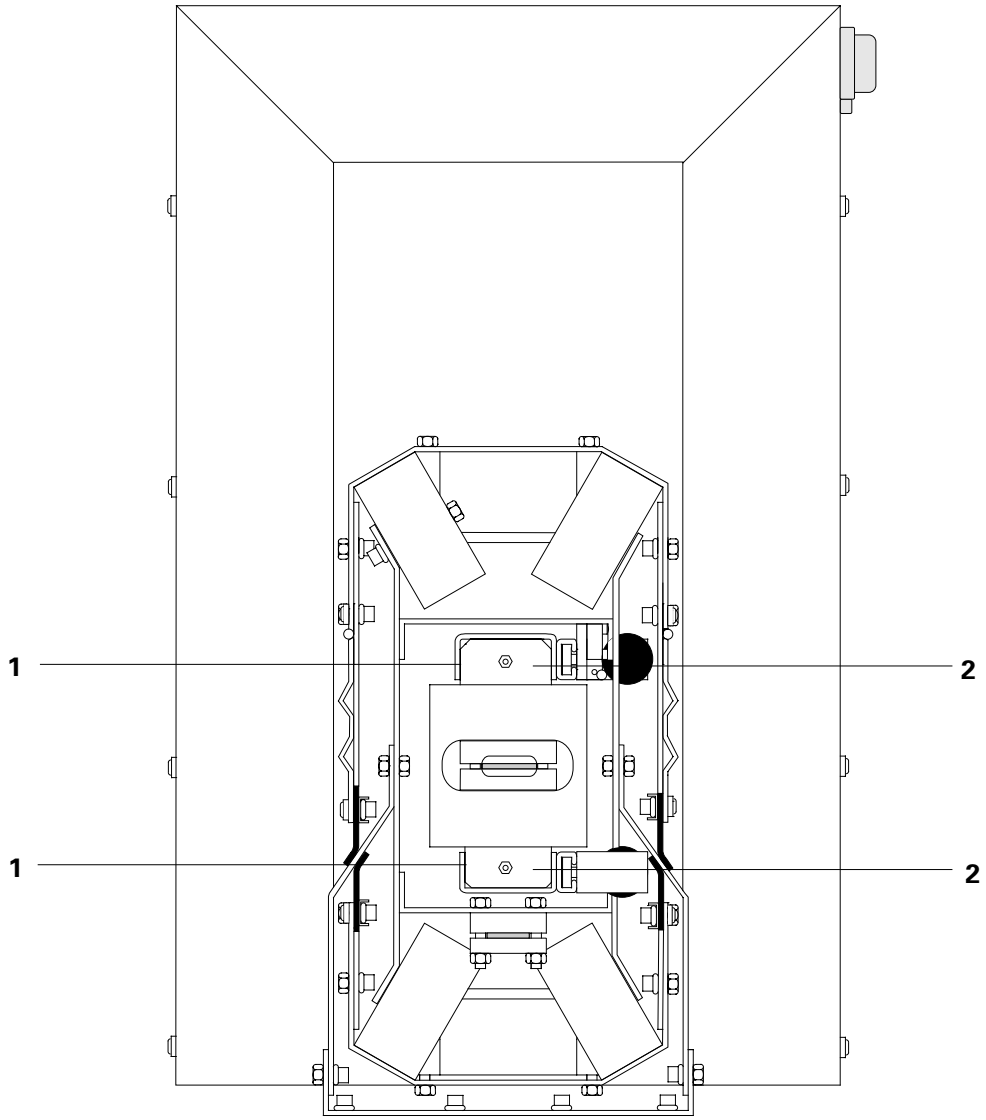

Figure 12

3.7 Supplementary weight

In order to compensate for the weight of additional guns and gun holders etc. a supplementary weight of 30 kg can be fitted into the recess in the counterweight. The supplementary weight is fixed to the counterweight by two screws.

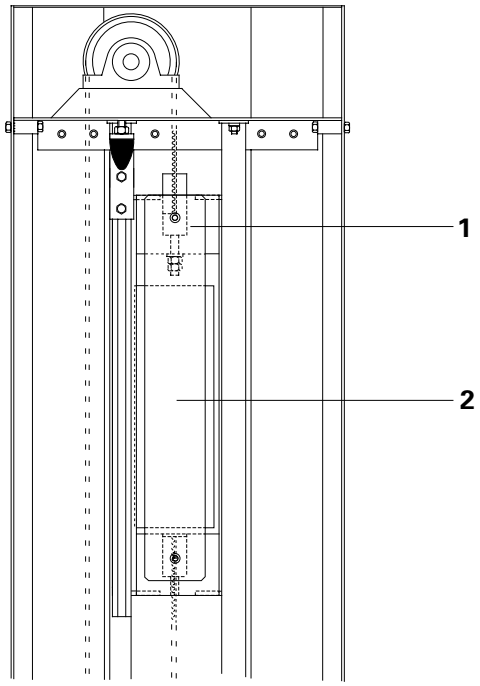

1 Counterweight 2 Supplementary weight

Figure 13

3.8 Replacing the rubber sealing strips on the vertical column.

Check the rubber sealing strips (**3**) on the vertical column doors for wear or damage, replace if necessary.
If there is excessive wear it may be necessary to change the both / all the rubber strips (**3**) on either side of the column. The procedure is the same for both sides.

Proceed as follows :

1. Unscrew the screws (**1**) at the top and bottom of the column holding the door panel(s) (**4**) closed.
2. Open the door(s). Unscrew the screws (**2**) holding the rubber strips (**3**) to the door panel(s) (**4**), and also to the vertical column.
3. Replace the rubber strip(s) (**3**).
   Fit the rubber strips and the metal profiles and tighten all screws.

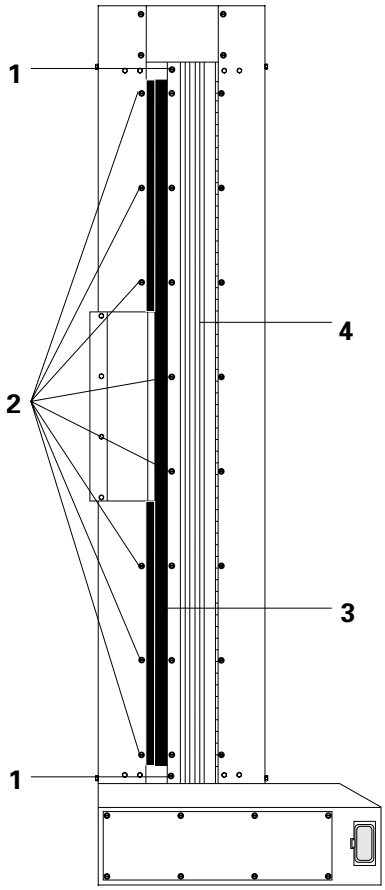

Figure 14

E

Spare Parts List and Gun Holders

ZA 1-.. Reciprocator

ITW Gema

Issued 10/98

Issued 10/98

Table of Contents

Issued 10/98

Issued 10/98

Spare Parts List

Ordering Spare Parts

When ordering spare parts for powder coating equipment, please indicate the following specifications :

1. Type, and serial number of the coating equipment.

2. Order number, quantity, and description of each spare part.

Example :

1.	***Type :***	*ZA 1-..*	***Serial no :***	*XXXX XXXX*
2.	***Order no :***	*344 389*	***Quantity :***	*8 pieces - Z Axis rollers*

When ordering cable or hose material the length required must also be given.
The spare part number of yard/metre ware always begins with 1.. ...

All dimensions of plastic hoses are given with the outside diameter (o/d) first and then the inside diameter (i/d).

e.g : ø 6/4 mm = 6 mm is the o/d and 4 mm is the i/d.

Issued 10/98

Door panel

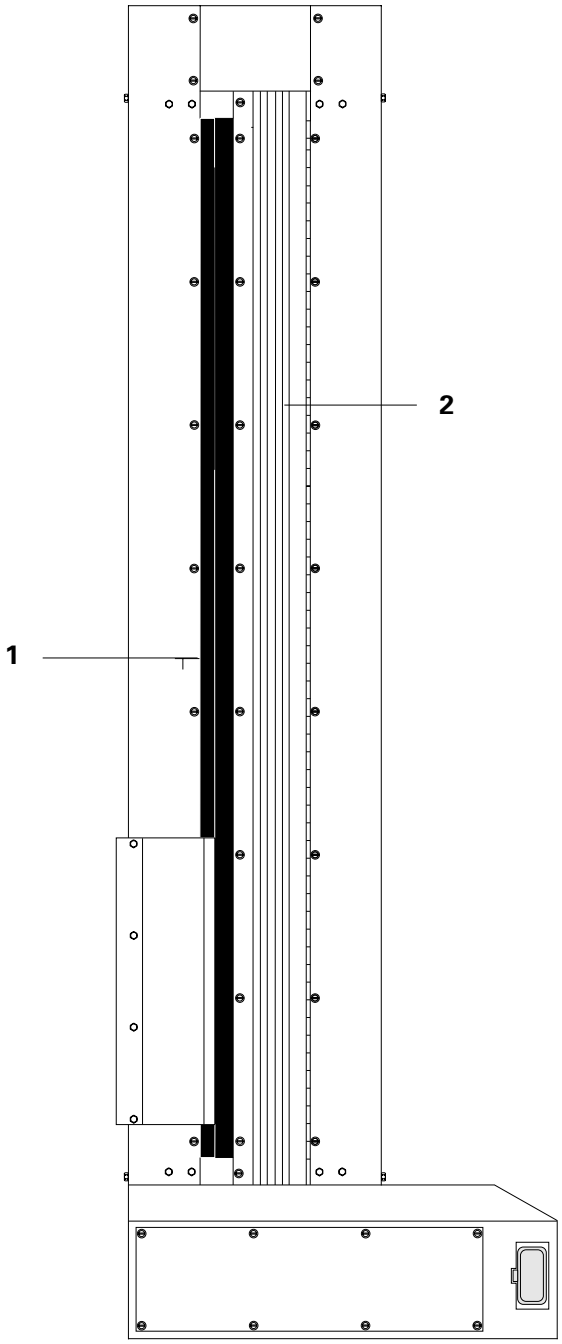

1	Rubber sealing strips :	ZA 1/12	344 737
		ZA 1/17	344 745
		ZA 1/22	344 753
		ZA 1/27	344 761
2	Vertical column door panel :	ZA 1/12	344 699
		ZA 1/17	344 702
		ZA 1/22	344 710
		ZA 1/27	344 729

Figure 1

Issued 10/98

Z Axis column (Internal parts)

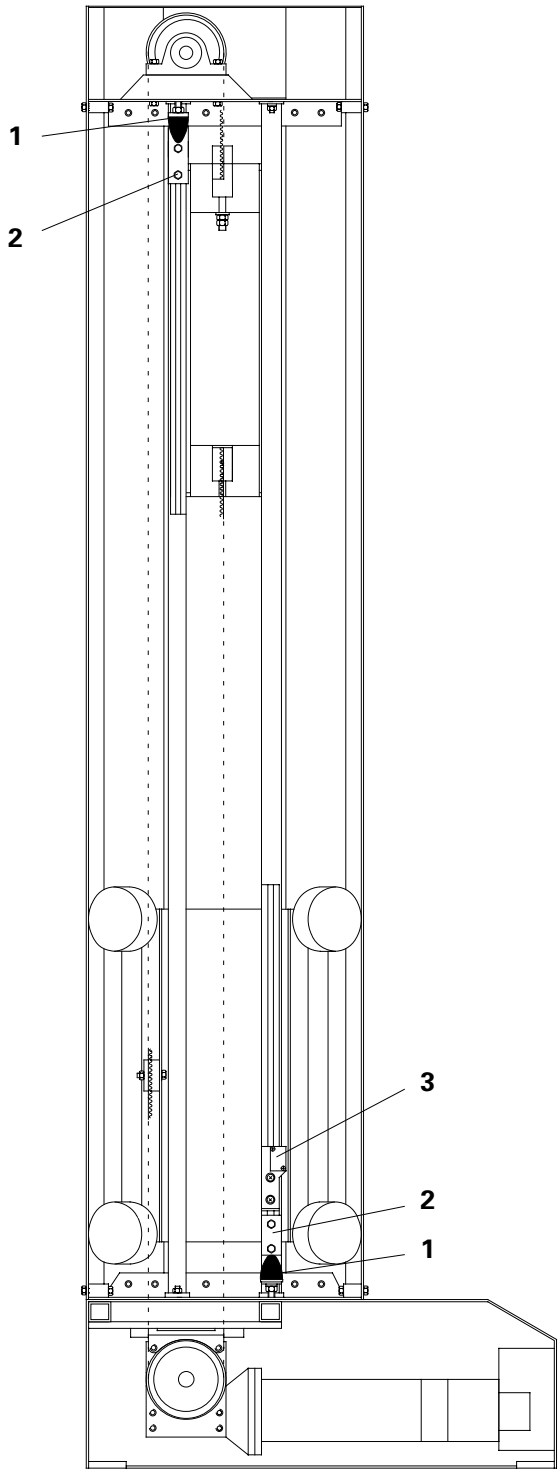

1	Rubber buffer	211 664
2	Buffer bracket	344 575
3	Proximity switch	241 458

Figure 2

Issued 10/98

Pedestal bearing and counterweight

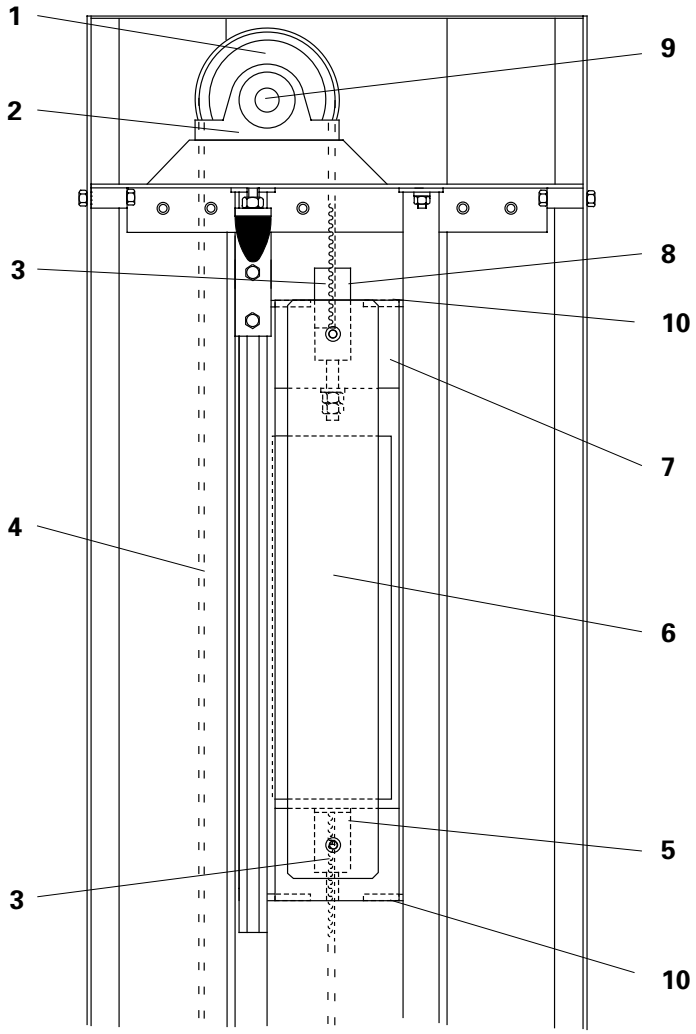

1	Upper toothed drive wheel		344 478
2	Pedestal bearing		201 375
3	Toothed clamp plate		344 443
4	Toothed drive belt		103 730
	ZA 1-12	4,30 m	
	ZA 1-17	5,30 m	
	ZA 1-22	6,30 m	
	ZA 1-27	7.30 m	
5	Lower clamp plate		344 451
6	Supplementary weight (Option)		344 419
7	Counterweight		344 397
8	Upper clamp plate		344 460
9	Pedestal bearing spindle		344 486
10	Guideway strips		344 427

Figure 3

Issued 10/98

Z Axis carriage

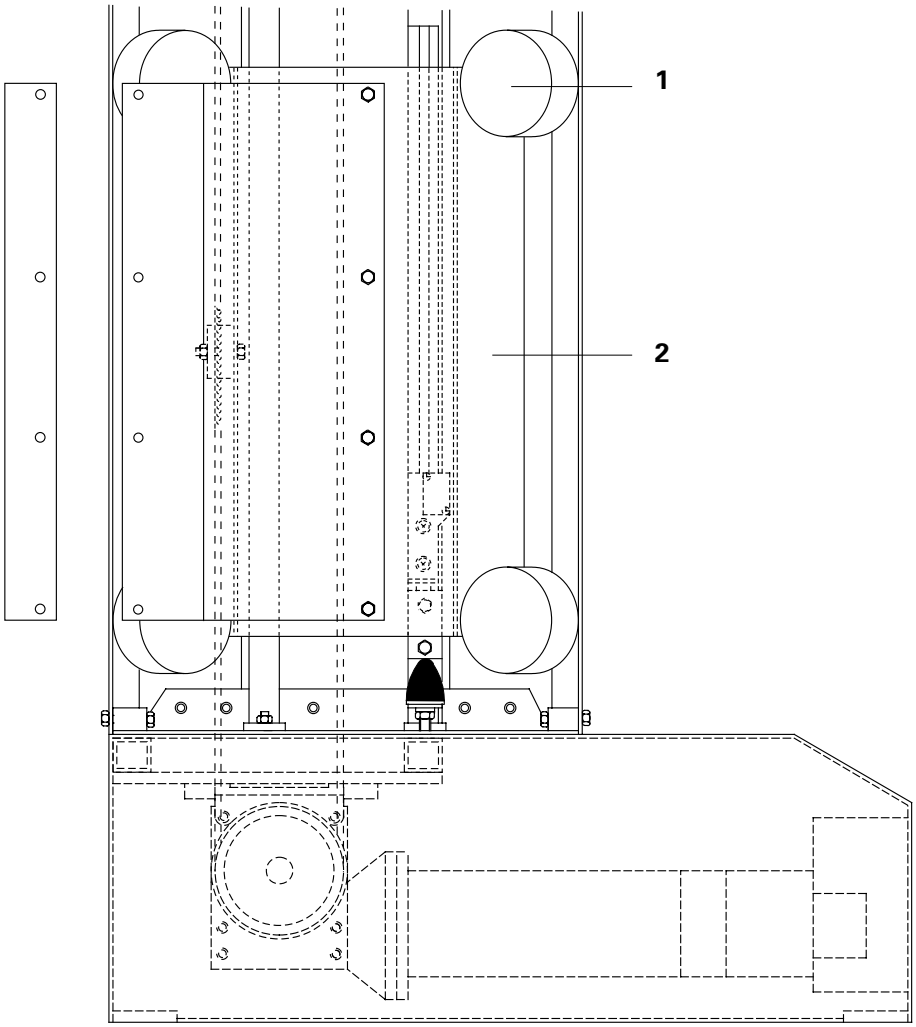

1	Z Axis carriage roller	344 389
2	Z Axis carriage (complete)	346 535

Figure 4

Issued 10/98

Z Axis carriage (Horizontal cross-section)

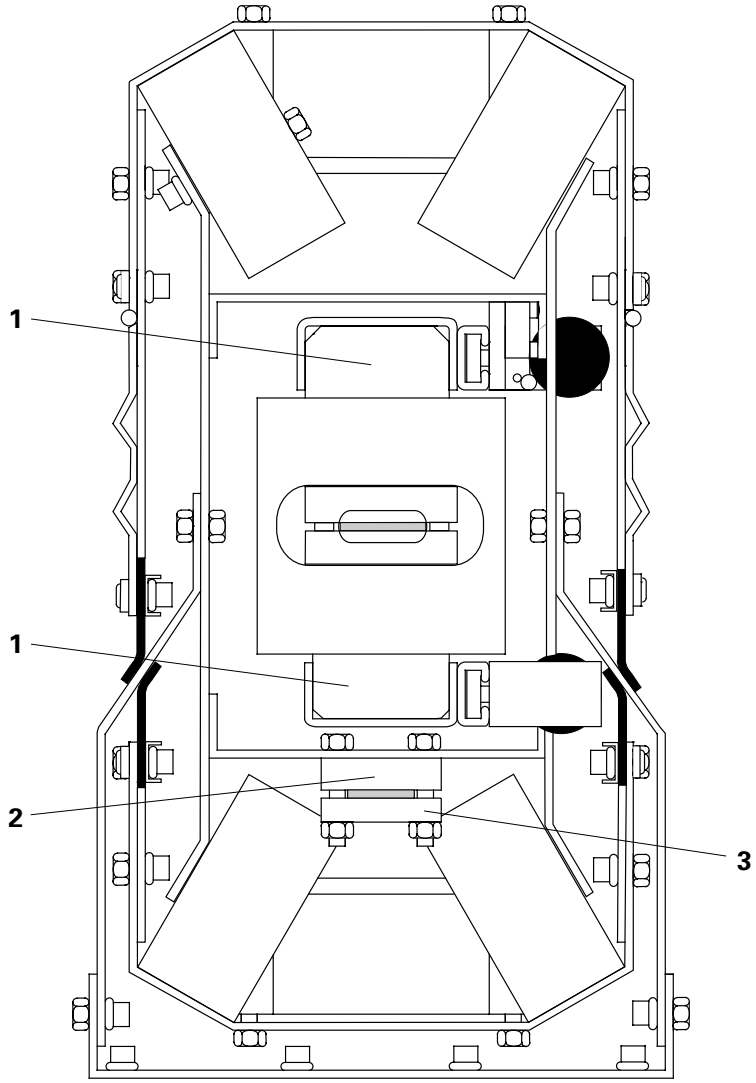

1	Guideway strips (Upper and lower)	344 427
2	Toothed carriage clamp plate	345 067
3	Carriage clamp plate	344 435

Figure 5

Issued 10/98

DC Motor (with worm gear drive)

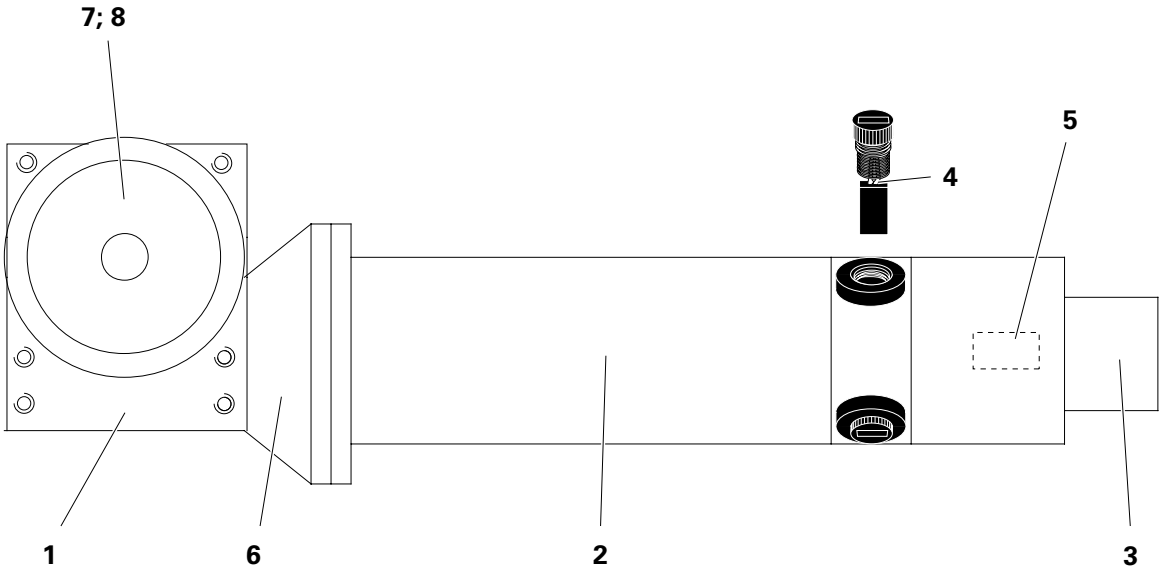

	DC motor (complete - items 1-6	345 113
1	Worm gear	241 440
2	DC motor	241 423
3	Pulse generator	241 466
4	Carbon brush (complete with cap)	242 640
5	Spring coupling	230 120
6	Star shaped intermediate ring (green)	263 974
7	Lower toothed drive wheel	368 610#
8	Tensioning set for item 7	256 978

Figure 6

Issued 10/98

Electrical contact box

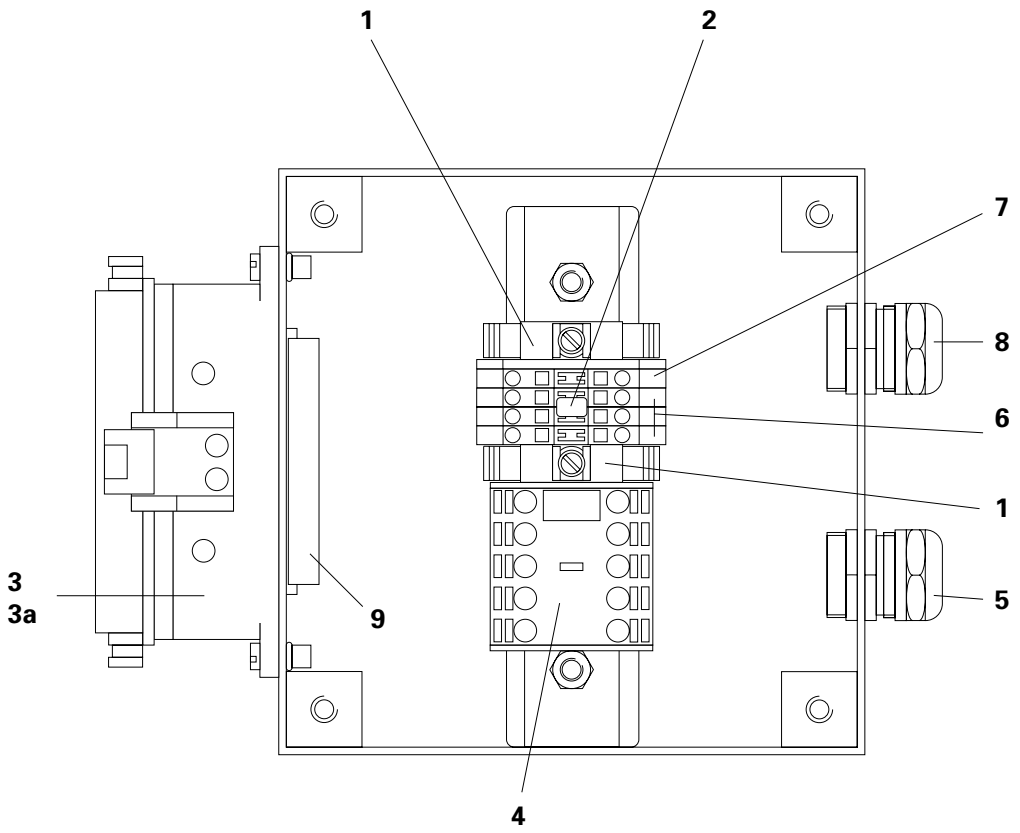

1	End piece	238 368
2	Contact bridge	238 392
3	16 pin socket housing	230 049
3a	16 pin socket insert	202 150
4	Relay	241 555
5	Lead-through - 1 hole grommet	204 366
6	Terminal clamp	240 273
7	Terminal clamp (ground)	240 117
8	Lead-through - 2 hole grommet	204 374
9	Brake resistor	241 563

Figure 7

Issued 10/98

Gun carrier for 1-4 Guns

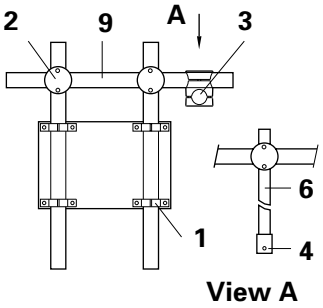

Gun carrier for 1 Gun

1	Pipe clamps - ø 40 mm	355 291
2	T-clamp blocks - ø 40 / 40 mm	363 910
3	T-clamp blocks - ø 40 / 30 mm	363 936
4	See page 12 - Gun fixtures etc	
6	Tubing - ø 30 x 800 mm	337 536
6.1	Tube cap (for Item **6** - ø 30 mm)	236 373
6.2	Tubing◊ - ø 30 x 800 mm	366 269
6.3	Tube cap	255 653
9	Tubing - ø 40 x 600 mm	337 552

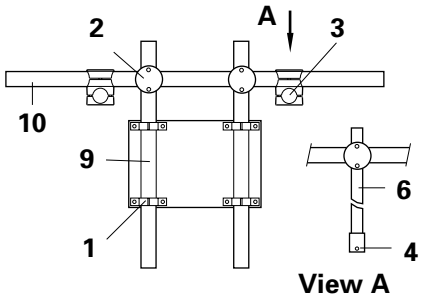

Gun carrier for 2 Guns

1	Pipe clamps - ø 40 mm	355 291
2	T-clamp blocks - ø 40 / 40 mm	363 910
3	T-clamp blocks - ø 40 / 30 mm	363 936
4	See page 12 - Gun fixtures etc	
6	Tubing - ø 30 x 800 mm	337 536
6.1	Tube cap (for Item **6** - ø 30 mm)	236 373
6.2	Tubing◊ - ø 30 x 800 mm	366 269
6.3	Tube cap	255 653
9	Tubing - ø 40 x 600 mm	337 552
10	Tubing - ø 40 x 1000 mm	337 560

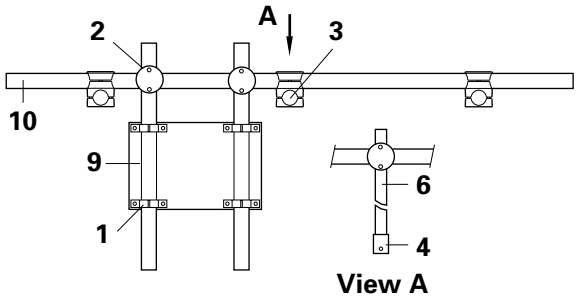

Gun carrier for 3 Guns

1	Pipe clamps - ø 40 mm	355 291
2	T-clamp blocks - ø 40 / 40 mm	363 910
3	T-clamp blocks - ø 40 / 30 mm	363 936
4	See page 12 - Gun fixtures etc	
6	Tubing - ø 30 x 800 mm	337 536
6.1	Tube cap (for Item **6** - ø 30 mm)	236 373
6.2	Tubing◊ - ø 30 x 800 mm	366 269
6.3	Tube cap	255 653
9	Tubing - ø 40 x 600 mm	337 552
10	Tubing - ø 40 x 1500 mm	337 579

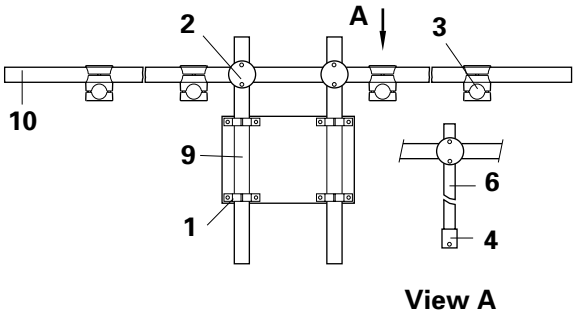

Gun carrier for 4 Guns

1	Pipe clamps - ø 40 mm	355 291
2	T-clamp blocks - ø 40 / 40 mm	363 910
3	T-clamp blocks - ø 40 / 30 mm	363 936
4	See page 12 - Gun fixtures etc	
6	Tubing - ø 30 x 800 mm	337 536
6.1	Tube cap (for Item **6** - ø 30 mm)	236 373
6.2	Tubing◊ - ø 30 x 800 mm	366 269
6.3	Tube cap	255 653
9	Tubing - ø 40 x 600 mm	337 552
10	Tubing - ø 40 x 2000 mm	337 587

Figure 8

◊ Reinforced glass fibre

Issued 10/98

Gun carrier for 2 x 1-4 Guns

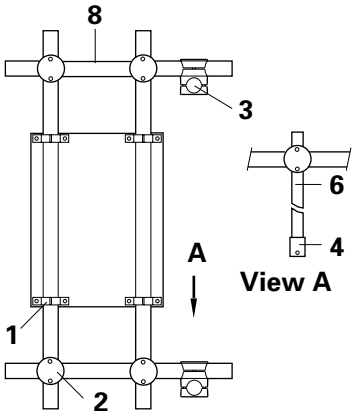

Gun carrier for 2 x 1 Gun

1	Pipe clamps - ø 40 mm	355 291
2	T-clamp blocks - ø 40 / 40 mm	363 910
3	T-clamp blocks - ø 40 / 30 mm	363 936
4	See page 12 - Gun fixtures etc	
6	Tubing - ø 30 x 800 mm	337 536
6.1	Tube cap (for Item **6** - ø 30 mm)	236 373
6.2	Tubing - ø 30 x 800 mm - RGF	366 269
6.3	Tube cap	255 653
8	Tubing - ø 40 x 600 mm	337 552
9	Tubing - ø 40 x 1000 mm	337 560

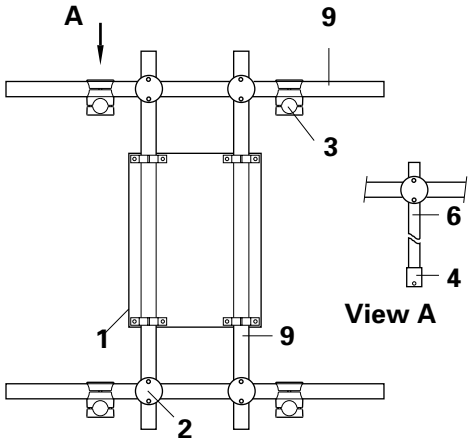

Gun carrier for 2 x 2 Guns

1	Pipe clamps - ø 40 mm	355 291
2	T-clamp blocks - ø 40 / 40 mm	363 910
3	T-clamp blocks - ø 40 / 30 mm	363 936
4	See page 12 - Gun fixtures etc	
6	Tubing - ø 30 x 800 mm	337 536
6.1	Tube cap (for Item **6** - ø 30 mm)	236 373
6.2	Tubing◊ - ø 30 x 800 mm	366 269
6.3	Tube cap	255 653
9	Tubing - ø 40 x 1000 mm	337 560

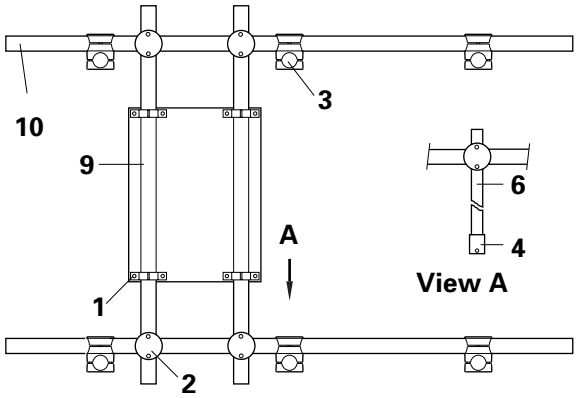

Gun carrier for 2 x 3 Guns

1	Pipe clamps - ø 40 mm	355 291
2	T-clamp blocks - ø 40 / 40 mm	363 910
3	T-clamp blocks - ø 40 / 30 mm	363 936
4	See page 12 - Gun fixtures etc	
6	Tubing - ø 30 x 800 mm	337 536
6.1	Tube cap (for Item **6** - ø 30 mm)	236 373
6.2	Tubing◊ - ø 30 x 800 mm	366 269
6.3	Tube cap	255 653
9	Tubing - ø 40 x 1000 mm	337 560
10	Tubing - ø 40 x 1500 mm	337 579

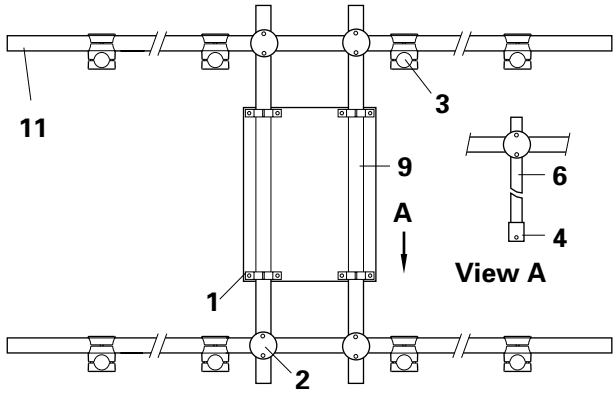

Gun carrier for 2 x 4 Guns

1	Pipe clamps - ø 40 mm	355 291
2	T-clamp blocks - ø 40 / 40 mm	363 910
3	T-clamp blocks - ø 40 / 30 mm	363 936
4	See page 12 - Gun fixtures etc	
6	Tubing - ø 30 x 800 mm	337 536
6.1	Tube cap (for Item **6** - ø 30 mm)	236 373
6.2	Tubing◊ - ø 30 x 800 mm	366 269
6.3	Tube cap	255 653
9	Tubing - ø 40 x 1000 mm	337 560
11	Tubing - ø 40 x 2000 mm	337 587

Figure 9

◊ Reinforced glass fibre

Issued 10/98

Gun carrier for 5-8 Guns

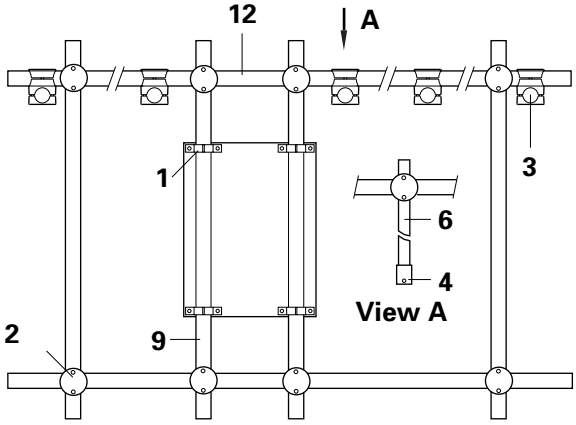

Gun carrier for 5 Guns

1	Pipe clamps - ø 40 mm	355 291
2	T-clamp blocks - ø 40 / 40 mm	363 910
3	T-clamp blocks - ø 40 / 30 mm	363 936
4	See page 12 - Gun fixtures etc	
6	Tubing - ø 30 x 800 mm	337 536
6.1	Tube cap (for Item **6** - ø 30 mm)	236 373
6.2	Tubing◊ - ø 30 x 800 mm	366 269
6.3	Tube cap	255 653
9	Tubing - ø 40 x 1000 mm	337 560
12	Tubing - ø 40 x 2500 mm	103 314
12.1	Tube cap - ø 40 mm	236 381

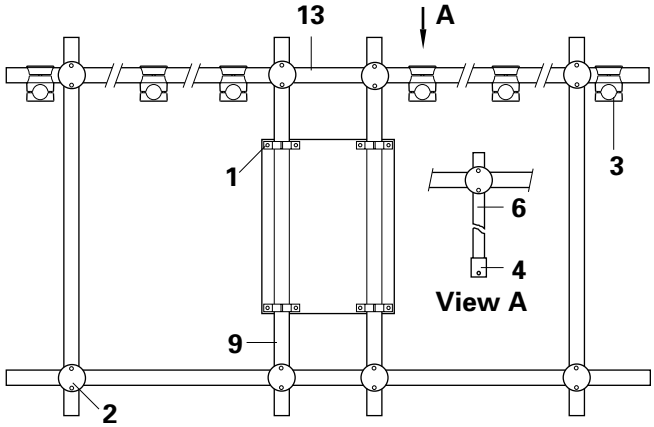

Gun carrier for 6 Guns

1	Pipe clamps - ø 40 mm	355 291
2	T-clamp blocks - ø 40 / 40 mm	363 910
3	T-clamp blocks - ø 40 / 30 mm	363 936
4	See page 12 - Gun fixtures etc	
6	Tubing - ø 30 x 800 mm	337 536
6.1	Tube cap (for Item **6** - ø 30 mm)	236 373
6.2	Tubing◊ - ø 30 x 800 mm	366 269
6.3	Tube cap	255 653
9	Tubing - ø 40 x 1000 mm	337 560
13	Tubing - ø 40 x 3000 mm	103 314
13.1	Tube cap - ø 40 mm	236 381

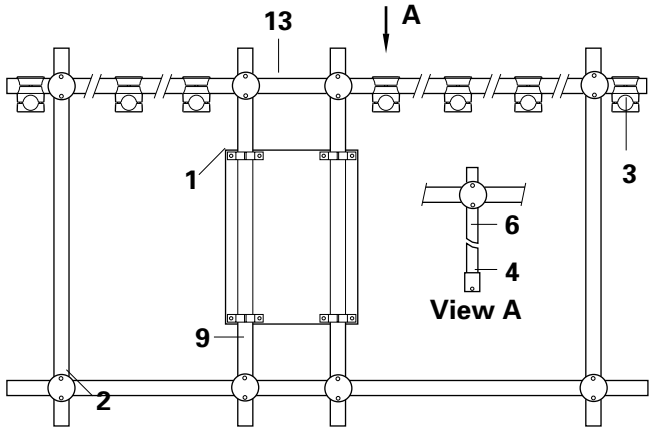

Gun carrier for 7 Guns

1	Pipe clamps - ø 40 mm	355 291
2	T-clamp blocks - ø 40 / 40 mm	363 910
3	T-clamp blocks - ø 40 / 30 mm	363 936
4	See page 12 - Gun fixtures etc	
6	Tubing - ø 30 x 800 mm	337 536
6.1	Tube cap (for Item **6** - ø 30 mm)	236 373
6.2	Tubing◊ - ø 30 x 800 mm	366 269
6.3	Tube cap	255 653
9	Tubing - ø 40 x 1000 mm	337 560
13	Tubing - ø 40 x 3000 mm	103 314
13.1	Tube cap - ø 40 mm	236 381

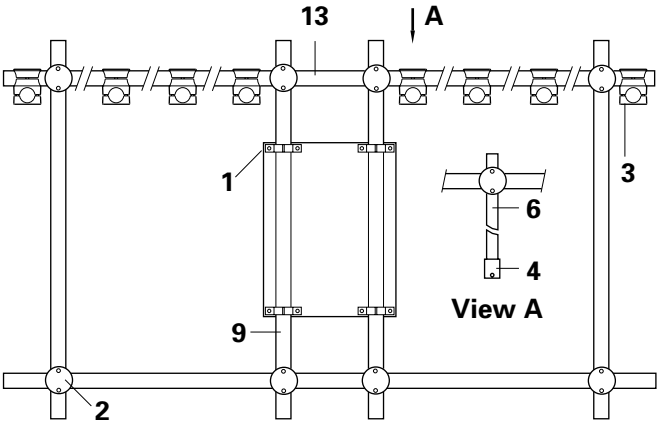

Gun carrier for 8 Guns

1	Pipe clamps - ø 40 mm	355 291
2	T-clamp blocks - ø 40 / 40 mm	363 910
3	T-clamp blocks - ø 40 / 30 mm	363 936
4	See page 12 - Gun fixtures etc	
6	Tubing - ø 30 x 800 mm	337 536
6.1	Tube cap (for Item **6** - ø 30 mm)	236 373
6.2	Tubing◊ - ø 30 x 800 mm	366 269
6.3	Tube cap	255 653
9	Tubing - ø 40 x 1000 mm	337 560
13	Tubing - ø 40 x 3000 mm	103 314
13.1	Tube cap - ø 40 mm	236 381

Figure 10

◊ Reinforced glass fibre

Gun fixtures and Collision protection

1	Gun fixture - ø 30 mm	350 150
2	Gun fixture - ø 40 mm	354 317
3	Gun fixture - ø 40 mm (Transverse)	356 670
4	Collision protection - ø 30 mm (for ZA Axis)	364 215
5	Adapter piece compl. - ø 30 mm (for ZA Axis)	364 231
6	Collision protection - ø 30 mm (for ZA Axis)	364 223
7	Adapter piece compl. - ø 30 mm (for ZA Axis)	364 240

Gun fixtures

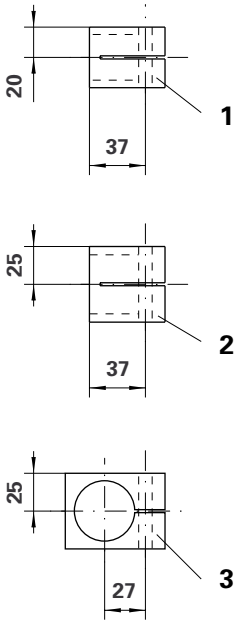

Collision protection

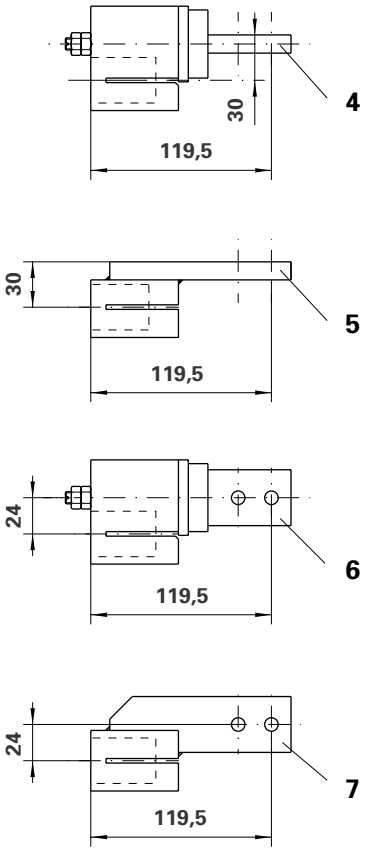

Figure 11

NOTES:

Documentation Reciprocator ZA 1-..

Printed in Switzerland

Issued 10/98