E

Operating Instructions and Spare Parts List

ZA02 Reciprocator

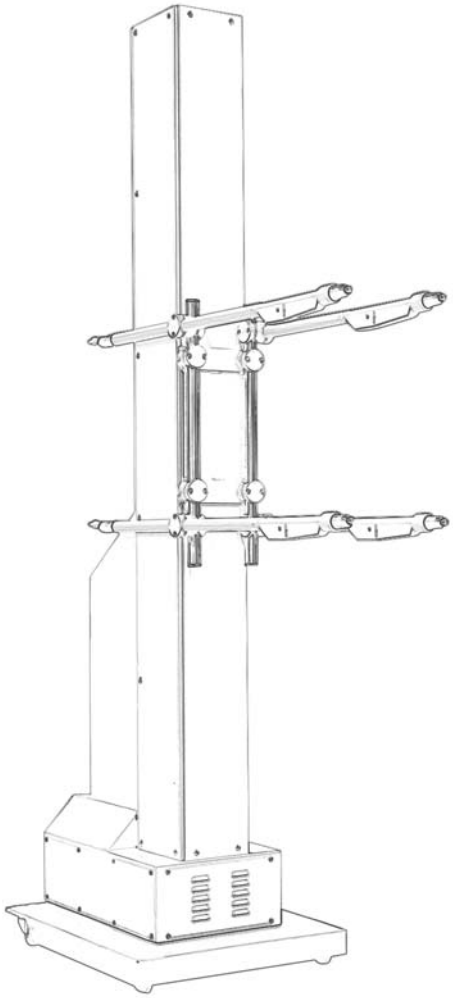

ITW Gema

Issued 08/03

Table of Contents

Issued 08/03

SAFETY RULES

1. The ZA 02 Reciprocator should only be started up after carefully reading these operating instructions. Incorrect setting of the CR 03 Gematic Reciprocator Control Unit and the ZA 02 Reciprocator can cause accidents, damage, and faulty operation to the equipment.

2. **The (motor drive) power of the axis is very much stronger than that of any human being!**

   The axis must be made inaccessible during operation (see local safety regulations). When the reciprocator is switched off the carriage can fall to the lowest reversing point under its own weight, therefore, never stand under the carriage when the reciprocator is switched off.

3. The plugs, and sockets of the CR 03 Gematic Reciprocator Control Unit, and the power unit of the ZA 02 Reciprocator should only be unplugged when the control module is *disconnected* from the Mains.

4. The connecting cables between the control unit and the reciprocator must be laid out so that they cannot be damaged during operation of the axes. All movable hoses and cables must also be laid out so that they are neither subjected to any excessive loads nor hang on other parts, even when the reciprocator is at the maximum height of its stroke.

   Please observe local safety regulations!

5. The maximum upper stroke limit of the reciprocator must always be set with reference to the maximum height of the booth gun slots. If the wrong stroke length is set (too high) this can cause damage to the booth and/or the reciprocator.

6. When replacing spare parts or carrying out repairs the CR 03 Gematic Reciprocator Control Unit and the ZA 02 Reciprocator must be disconnected from the Mains according to local safety regulations.

7. Only original ITW Gema Spare Parts should be used. The use of spare parts from other manufacturers will invalidate the ITW Gema guarantee conditions.

Issued 08/03

TECHNICAL DATA FOR THE ZA 02 RECIPROCATOR

Dimensions:

Overall height - H:	ZA02-13 = 2,385 m ZA02-18 = 2,885 m ZA02-23 = 3,385 m ZA02-28 = 3,885 m
Lenght of stroke:	ZA02-13 = variable up to 1,3 m ZA02-18 = variable up to 1,8 m ZA02-23 = variable up to 2,3 m ZA02-28 = variable up to 2,8 m

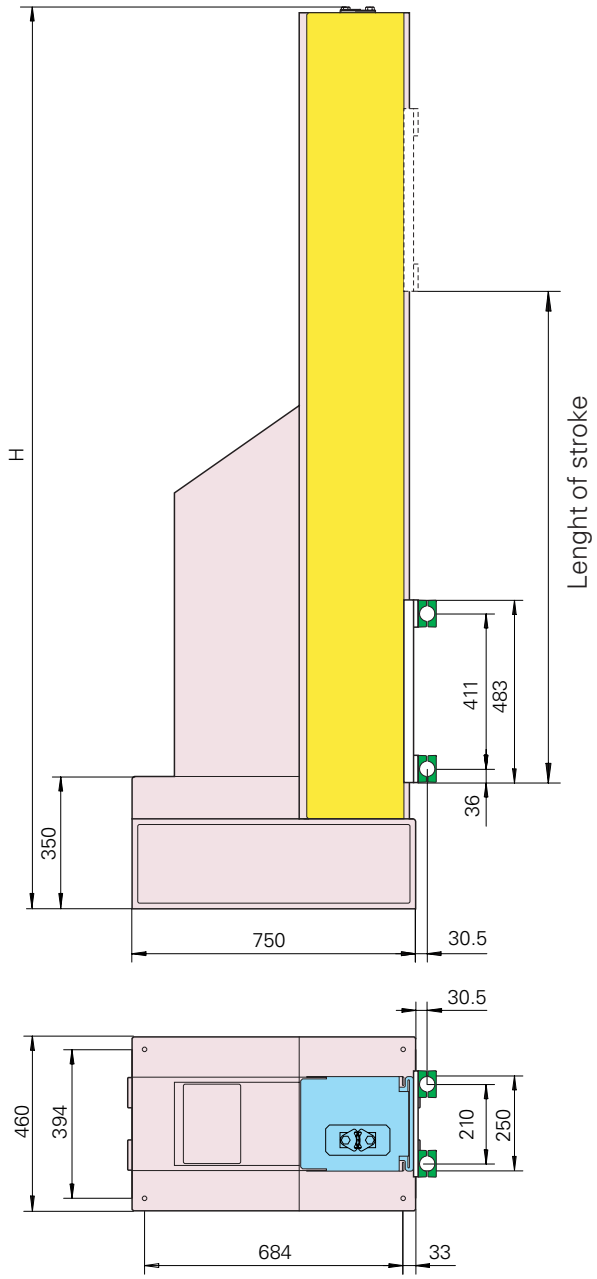

TECHNICAL DATA FOR ZA 02 RECIPROCATOR (CONTINUED)

Maximum load on Z Carriage:	max. 50 kg
Speed of stroke:	0.05 to 0.75 m/s.
Acceleration:	1-2 m/s²
Position detection:	Incremental Pulse Generator
Type of protection:	IP 54
Control unit:	CR 03 Gematic Control Unit
Motor drive unit:	AC Motor
- Rating:	0.75 kW
- Voltage:	210/365 V / 87 Hz
- Connection:	Delta
- Motor RPM:	2540 1/min.
- Lubricating oil:	Shell Omala 220
- Volume:	0.28 Litre

SCHEMATIC DIAGRAM

CR 03 Gematic Reciprocator Control

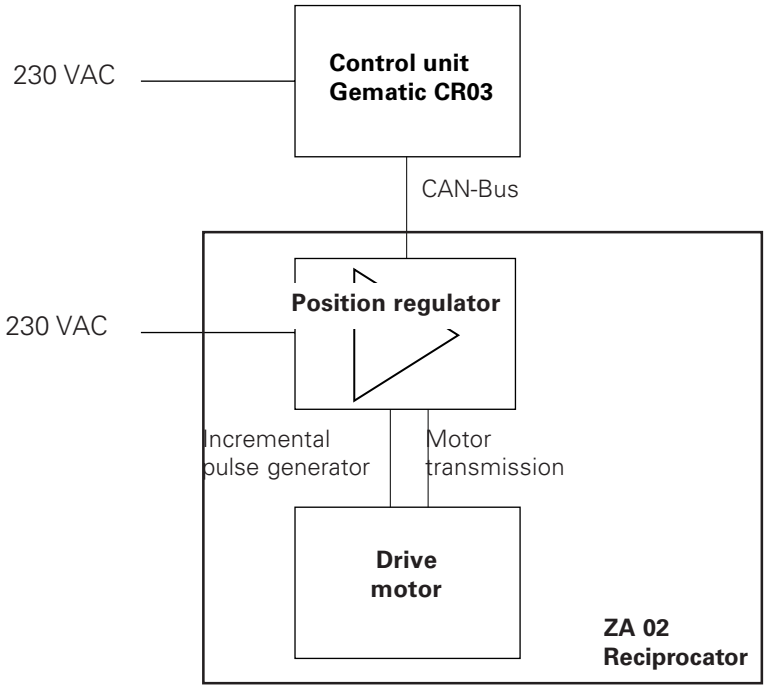

DESCRIPTION OF THE ZA 02 RECIPROCATOR

1. DESCRIPTION OF FUNCTION

1.1 SPECIAL CHARACTERISTICS

The ITW Gema ZA 02 Reciprocator is conspicuous because of its rugged construction, a new drive system, and an improved Z axis carriage design. Further characteristics are:

- 50 kg automatic gun and gun holder carrying-capacity
- Built-in holding brake
- Quiet running
- High speed, maximum acceleration and braking
- Safer operation, and simpler maintenance
- High efficiency due to low energy consumption
- Designed for continuous operation
- Mobile version available
- IP 54 type protection
- Four standard stroke heights available: 1.3 m, 1.8 m, 2.3 m, and 2.8 m (intermediate and oversizes in steps of 250 mm)

⚠ **ATTENTION**

Before connecting and/or starting the reciprocator please read these instructions carefully!! Before the reciprocator is put into operation the upper stroke limit must be set on the CR 03 Gematic Reciprocator Control.

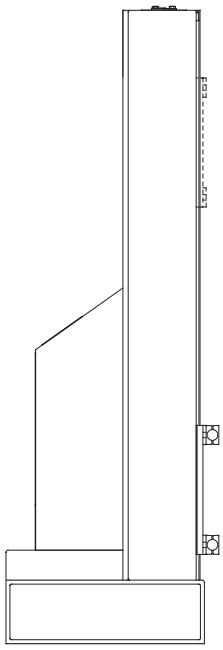

ZA02 Reciprocator - Side view

Figure 1

1.2 DESCRIPTION OF THE ZA 02 RECIPROCATOR

(The bold figures in the text below refer to Figure 2, unless mentioned otherwise.)

The ZA 02 Reciprocator was designed for powder coating with automatic powder guns. The reciprocator carriage oscillates vertically on the column. The movement sequences (stroke, and stroke speed) are controlled by the CR 03 Gematic Reciprocator Control unit.

The gun carrier plate (**27**) is fitted on the front of the Z Carriage (**26**). The Z Carriage (**26**) is moved up and down with a toothed belt (**42**) on rollers on the central column inside the reciprocator. The vertical column serves as a runway for the rollers. The drive unit (**2**) with the electrical connection are built into the reciprocator base (**1**). The motor is fitted with an incremental pulse generator for monitoring the exact positioning of the Z Carriage.

At every start-up (after the Mains have been interrupted) the reference point of the reciprocator must always be checked (approximately 30 mm above the gun slot, see 2.6 Reference Point).
After the reference point is reached the reciprocator begins to carry out the movements set on the control unit.

Before starting operation the **upper stroke limit of the reciprocator must be set** on the CR 03 Gematic (see the CR 03 Gematic Reciprocator Control Unit Operating Instructions).

⚠ ATTENTION

Incorrect setting of the upper stroke limit can cause damage to the booth and/or reciprocator, and guns.

ZA 02 RECIPROCATOR (VERTICAL CROSS-SECTION)

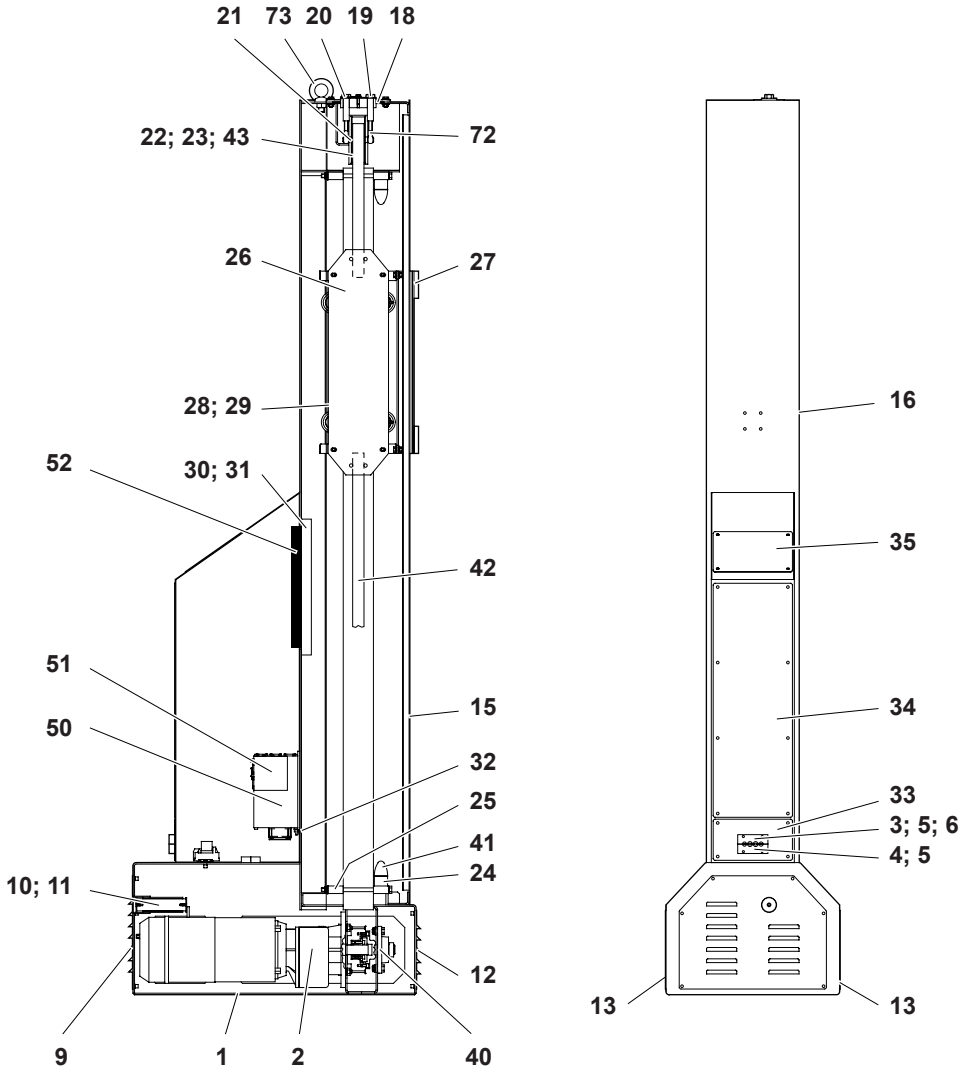

1	Base	22	Reversing pulley	41	Rubber buffer
2	Drive	24	Stop plate	42	Toothed belt
3	Clamping profile SS	25	Counter profile	43	Deep groove ball race
4	Clamping profile GG	26	Z Carriage	50	Position regulator
5	Cable bush	27	Gun carrier plate	51	Regulator for CAN-Bus
6	Gasket	28	Belt holder	52	Brake resistor
9	Service cover	29	Clamp plate	72	Eye bolt
10	Brake switch plate	30	Heat sink	73	Ring bolt
11	Brake switch lever	31	Gasket		
12	Service cover	32	Clamp plate		
13	Service cover	33	Cable connection holder		
18	Guide plate	34	Cover plate		
19	Tension screw	35	Cover plate		
20	Locking plate	40	Flange bearing		
21	Reversing spindle				

Figure 2

Issued 08/03

2. PREPARATION FOR START-UP

2.1 BEFORE STARTING UP

⚠ ATTENTION

Before starting work, make certain that nobody can switch the reciprocator on!
Always switch off the reciprocator at the mains switch first!

Before starting up, the following checks should be made:

- Check that the gun, and powder hose mounts are firmly fitted
  (Mount the gun holders so that they do not hit the bottom of the booth slots on start-up and cause damage)
- Lay out the cables and hoses so that even at the highest stroke no strain can arise
- Make sure that no guns can collide with the workpieces
- Check the grounding of the guns, and hose carriers
- Check that the upper, and lower reversing points of the Z Carriage are set correctly. The stroke of the reciprocator must be within the height of the gun slots of the booth
- Make sure that automatic guns cannot collide with workpieces (incorrectly set stroke parameters on the CR 03 Gematic Reciprocator control unit)

2.2 BEFORE SWITCHING THE RECIPROCATOR ON

Make the following checks before switching the reciprocator on:

- Check that the cables, and hoses are laid out correctly
- Check that the guns have a clear run and do not touch the booth slots
- Check the distance between the guns and workpieces

⚠ ATTENTION

Carefully read through these Operating Instructions *before* starting up or switching on the reciprocator.

2.3 GROUNDING

All metal parts of the reciprocator must be satisfactorily grounded (metal-to-metal) according to local safety regulations. The guns holders must also be connected to the grounding connection on the reciprocator base.

2.4 HOSES AND CABLES

All movable hoses and cables must be laid out so that they are neither subjected to any loads nor can hang on other parts even when the reciprocator is at maximum stroke.
The electric cables of the reciprocator etc. must also be laid out so that they cannot be damaged.

2.5 PROTECTIVE SYSTEM

Electrical components are in accordance with IP 54 Type Protection, according to VDE *(German Electrical Society)* regulations.

2.6 REFERENCE POINT AND MECHANICAL STOP

(The bold figures in the text below refer to Figure 2, unless mentioned otherwise.)

The reference point serves as the starting point for calculating the upper, and lower reversing points, and the maximum stroke.
Each time the reciprocator is switched on the control unit requests that the Z Carriage travels to the reference point (zero point). The Z Carriage travels to the lowest mechanical stop, that is, onto the rubber buffer and remains in this end position on the compressed buffer. The control unit notes this and gives the distance how far the carriage must travel from this position to decompress the rubber buffer. The standard value for the Z axis is 25, that is, 25 mm upwards away from the mechanical stop. The reason for this is that the CR 03 Reciprocator Control Unit must be programmed so that the reference point is always 25 mm above the lowest mechanical stop (zero point).

ATTENTION

In order to avoid damage to the booth or the powder gun holder, the reference point must be checked before the first Start-up and if necessary, reset. It must be noted that the axis, in reference travel moves up to 25 mm below the Control's zero point, as a result the mechanical stop must be accommodated to the gun slots - see below.

(The height of the stop plate (**24**) must be set by an ITW Gema service engineer when the reciprocator is fitted to the powder booth for the first time).

In order not to damage the booth or gun holders etc., the reference point must be travelled to *before* each Start-up (after the mains have been interrupted etc.) takes place.

(Cont.)

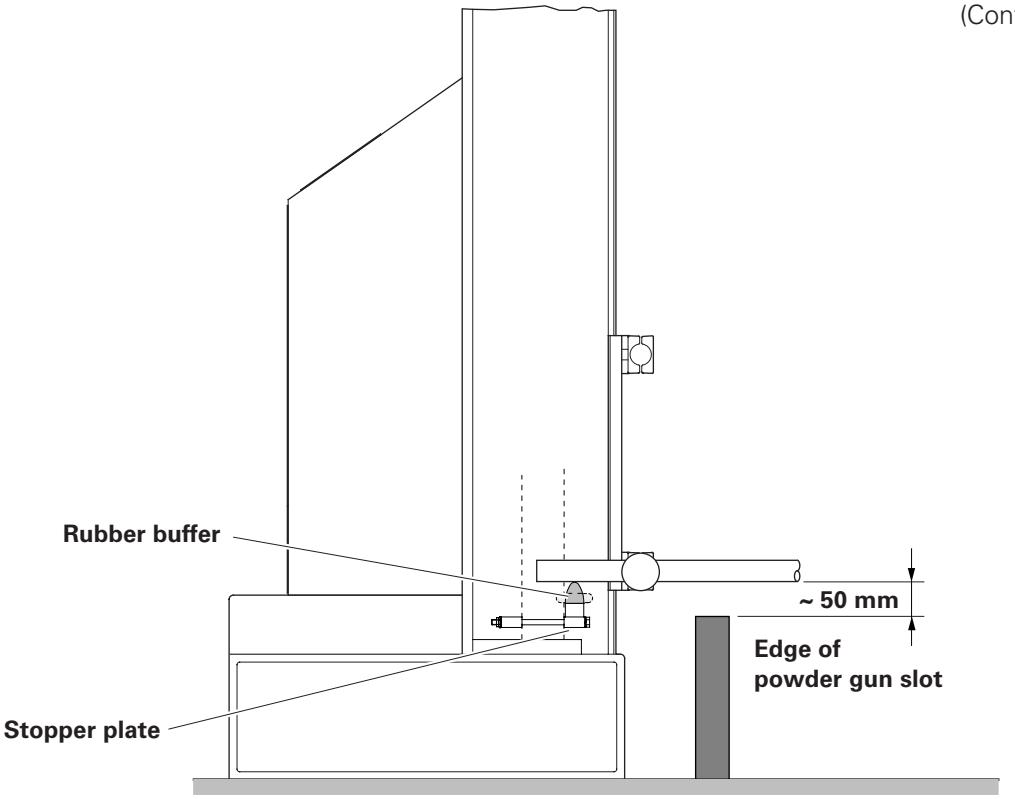

Figure 3

2.6.1 Setting the Lower Mechanical Stop:

Procedure:

1. Release the brake switch (**11**) manually
2. Let the Z Carriage (**26**) sink down until the powder gun holder is approximately 50 mm above edge of the gun slot
3. Switch off the electrical power
4. Remove the panel (Side panel - **16** - Fig. 8)
5. Release the nuts of the stop plate (**24**) and push it up to the Z Carriage
6. Tighten the nuts
7. Replace the side panel

2.6.2 Setting the Upper Mechanical Stop

To set the upper mechanical stop, use the similar procedure when setting the lower mechanical stop - see above.

⚠ ATTENTION

After setting the mechanical stops the System Parameters for the upper stroke limit must be checked in the Reciprocator Control Unit. The value must not be greater than the maximum stroke possible between the stops.

3. MAINTENANCE ON THE ZA 02 RECIPROCATOR

(The bold numbers in the following text refer to Figure 2, when not otherwise mentioned.)

3.1 GENERAL

⚠ ATTENTION

Before carrying out maintenance work on the reciprocator always make certain that nobody can operate the reciprocator. Switch off and lock the Mains switch.

The ZA 02 Reciprocator was designed to operate with a minimum of maintenance. The gear box of the motor is self-lubricating and maintenance-free. Regular maintenance and inspection of the reciprocator increase the operating safety and help to reduce wear and tear, and repair downtime, etc.

- Blow off the **outside** of the reciprocator with compressed air or wipe down with a soft cloth from top to bottom at least once a week. If necessary, blow out the slots.

3.2 DRIVE UNIT

⚠ ATTENTION

For safety reasons the following maintenance work should always be carried out by two people!

The gear of the drive motor is self-lubricating and maintenance-free.

- Take note of the external contamination of the housing!

  Heavy external contamination can cause an increase in the operating temperature of the motor! Clean the drive unit from time to time (with a vacuum cleaner etc.)
- Check the motor unit once a month for oil loss

If the gearbox of the drive unit has to be changed, for any reason, then the complete unit must be exchanged!

3.2.1 Replacing the complete drive unit

When it is necessary to replace a drive unit the motor must be dismantled from the reciprocator base.

Procedure:

1. Release the brake (**11**) manually. Move the Z Carriage (**26**) manually down onto the rubber buffer at the bottom of the column
2. Switch off the electrical power
3. Remove all the panelling from the reciprocator
4. Remove the locking plates (**20**) and loosen the tensioning bolts (**19**) until the toothed belt (**42**) is no longer under tension
5. Release the lower clamp plate of the toothed belt on the Z Carriage (**26**) and set it down. Note the position of the clamp plate on the toothed belt holder because it should be replaced in approximately the same position on assembly
6. Loosen the grubscrew on the clamp ring on the front of the flange bearing (**40**)

(Cont.)

3.2.1 Replacing the complete drive unit

(The bold figures in the text below refer to Figure 2, unless mentioned otherwise.)

7. Use a hammer and a suitable drift (from the side, in the hole of the clamp ring) to release the clamp ring from the motor spindle (counter-clockwise)
8. Remove the clamp ring, but not the flange bearing (**40**)
9. If the grubscrew or the hole is not accessible, release the brake manually and turn the drive wheel by hand to a suitable position

Figure 4

10. Release the cable clamp on the position regulator (**50**) and the disconnect the motor cable plug from Connection X1
11. Disconnect the incremental pulse generator cable from Connection X7
12. Open the cable lead-through by unscrewing one half of the clamping profile and only loosening the other half
13. Support the rear of the motor, so that it remains balanced and does not tilt backwards when the motor flange screws are released
14. Remove the screws and carefully remove the motor from the rear of the reciprocator base

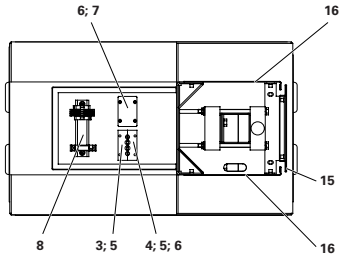

Figure 5

ATTENTION

Take particular care of the motor connection cable. Because the cable underneath, it can happen that on removal of the motor the cable insulation can be damaged on a sharp edge in the base.

Assembly takes place in the reverse order as described above.

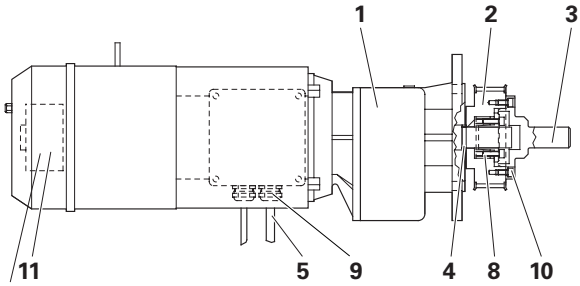

Incremental pulse generator

Figure 6

3.3 TOOTHED DRIVE BELT

(The bold numbers in the following text refer to Figure 7, when not mentioned otherwise.)

ATTENTION

For safety reasons it is always recommended that two people carry out the following operations.

The toothed drive belt (**42**) should be checked regularly as it is subject to a great deal of stress when in operation.

- The toothed belt (**42**) should be checked once a week for contamination. Powder deposits should be removed with a vacuum cleaner, as this can influence the quiet running of the reciprocator and shorten the life of the toothed belt
- Check the toothed wheels (**2**, Fig. 6 and **22**) once a week for contamination and wear and remove powder deposits with a vacuum cleaner
- Switch on and run the reciprocator to check the Z Carriage (**26**) for quiet running

Check the toothed drive belt (**42**) for elongation and/or wear (Noisy running, strong vibration of the belt when reversing the direction of travel).

3.3.1 Tensioning the toothed belt

- Remove the locking plates (**20**)
- Tighten the toothed belt evenly with the tensioning screws (**19**)
- The guide plate (**18**) must **not** be unscrewed **for any reason!**(Works setting)

3.3.2 Replacing the toothed belt

Procedure:

1. Release the motor brake (**11**) manually, let the Z Carriage (**26**) travel down onto the end stop
2. Switch off the electrical power
3. Remove the side panels (**16** - Fig. 8)
4. Remove the locking plate (**20**) and loosen the tensioning screws so that the toothed belt (**42**) is slack
5. Loosen the lower clamp plate of the toothed belt on the Z Carriage (**26**) and release. Note the position of the clamp plate on the toothed belt holder because it must be fitted in approximately in the same position on assembly
6. Remove the damaged toothed belt (**42**) from the reciprocator column
7. Only when the toothed belt is completely out of the reciprocator the screws from the upper clamp plate can be removed and the toothed belt disposed of
8. Screw the new toothed belt onto the upper clamp plate
9. Pass the loose end of the toothed belt over the upper toothed wheel from inside the reciprocator column
10. and pull through, round the toothed wheel of the motor
11. Screw the toothed belt on to the lower clamp plate
12. Tension the toothed belt, but do not over-stretch (see also „3.3.1 Tensioning the toothed belt“)

3.3 Toothed belt (Cont.)

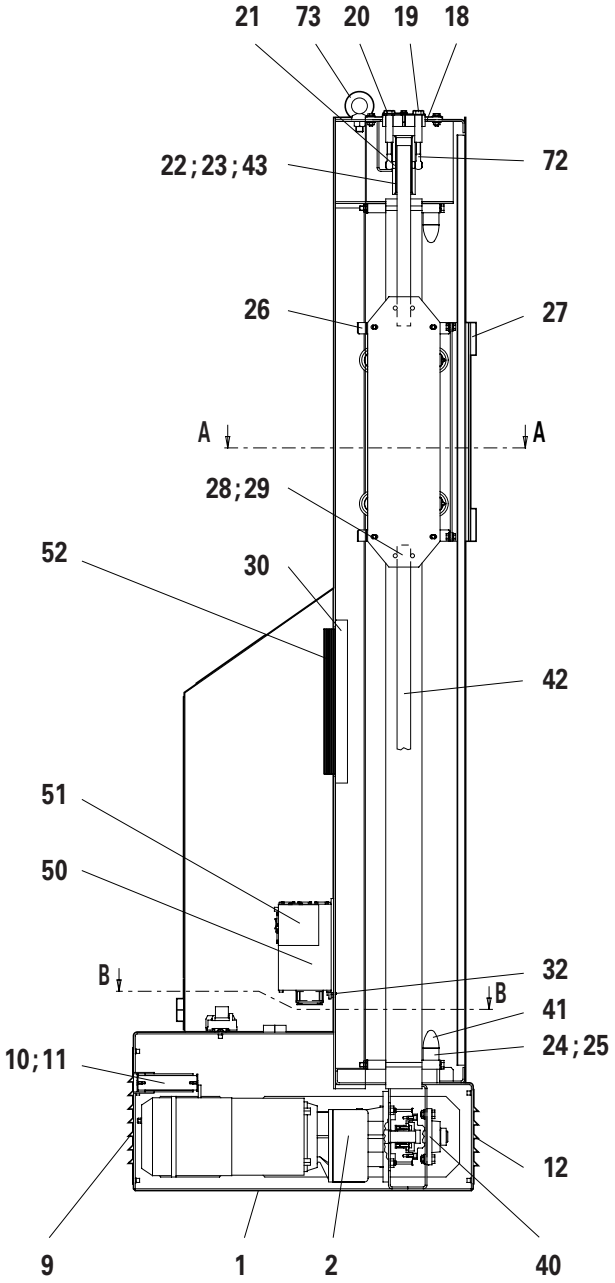

Figure 7

3.4 REPLACING THE UPPER TOOTHED WHEEL

(The bold numbers in the following text refer to Figure 7, unless otherwise mentioned.)

The following work should only be carried out by **trained** personnel!

Procedure :

1. Release the motor brake (**11**) manually, let the Z Carriage (**26**) descend to the lower end stop
2. Switch off the electrical power
3. Remove the panelling (Side plates - **16** - Fig. 8)
4. Remove the locking plates (**20**) and loosen the tensioning screws until the toothed belt (**42**) is slack
5. Remove the front tensioning screw completely

⚠ ATTENTION

Danger of accidents. The Z Carriage must definitely rest on the rubber buffer before this tensioning screw is removed!

6. Support the upper toothed wheel (**22**) tight in one hand whilst the eye bolt (**72**) is being removed from the spindle
7. Remove the toothed belt (**42**) from the toothed wheel
8. Remove the toothed wheel (**22**) and replace

Assembly is in the reverse order of that described above.

- If necessary, remove the service cover (**13** - Fig. 2) on the base (**1**) to check if the toothed belt (**42**) is sitting correctly on the toothed drive wheel.
- Let the Z Carriage slowly run up and down the column a few times to see if the toothed belt must be tensioned more.

View from above

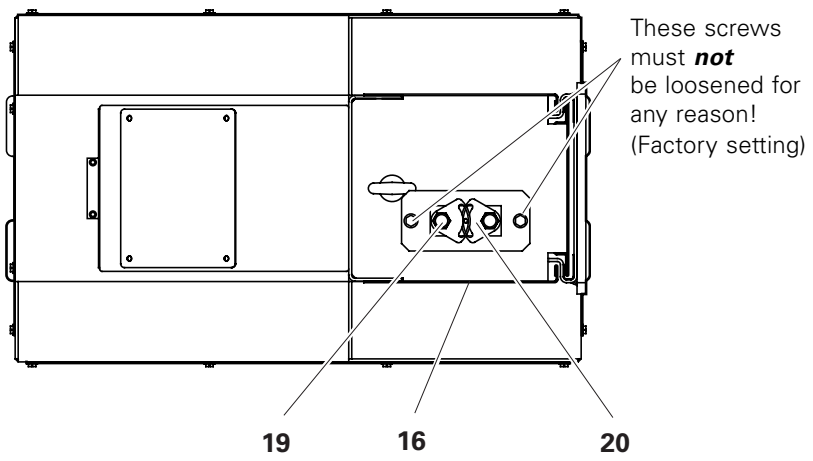

Figure 8

3.5 Z CARRIAGE: ROLLERS

(The bold numbers in the following text refer to Figure 7, unless otherwise mentioned.)

If the Z Carriage (**26**) starts to vibrate excessively during operation, especially at the reversing points, in most cases the cause lies in too much play in the carriage or even a loose roller.

In this case, proceed as follows:

1. Release the motor brake (**11**) manually, let the Z Carriage (**26**) move down onto the lower stop
2. Switch off the electric power
3. Remove the panelling (Front plate and side plates - **15** and **16** - Fig. 5)
4. Loosen the locking nut (**10** - Fig. 9) on the grubscrew (**9** - Fig. 9)
5. Loosen the shake-proof nut (**7** - Fig. 9) on the roller axle bolt (**5** - Fig. 9)

⚠ ATTENTION

Never loosen more than one roller at the same time, because the Z Carriage will come apart, therefore only set one roller after the other!

6. Set the fine roller pressure with the grubscrew, only so much that the roller can just be turned by hand
7. Tighten the nuts
8. Lock the counter nuts firmly on the grubscrews
9. Fit the panels and screw tight

The Z Carriage should run evenly and quietly again.

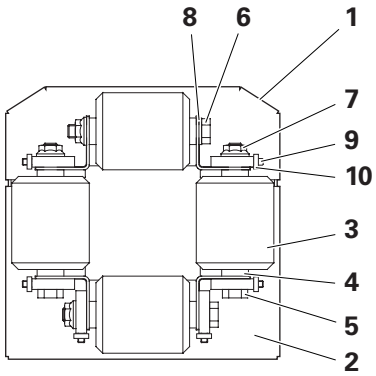

Figure 9

ELECTRICAL DIAGRAM

CLAMP CONNECTION - COMPLETE (Z AXIS)

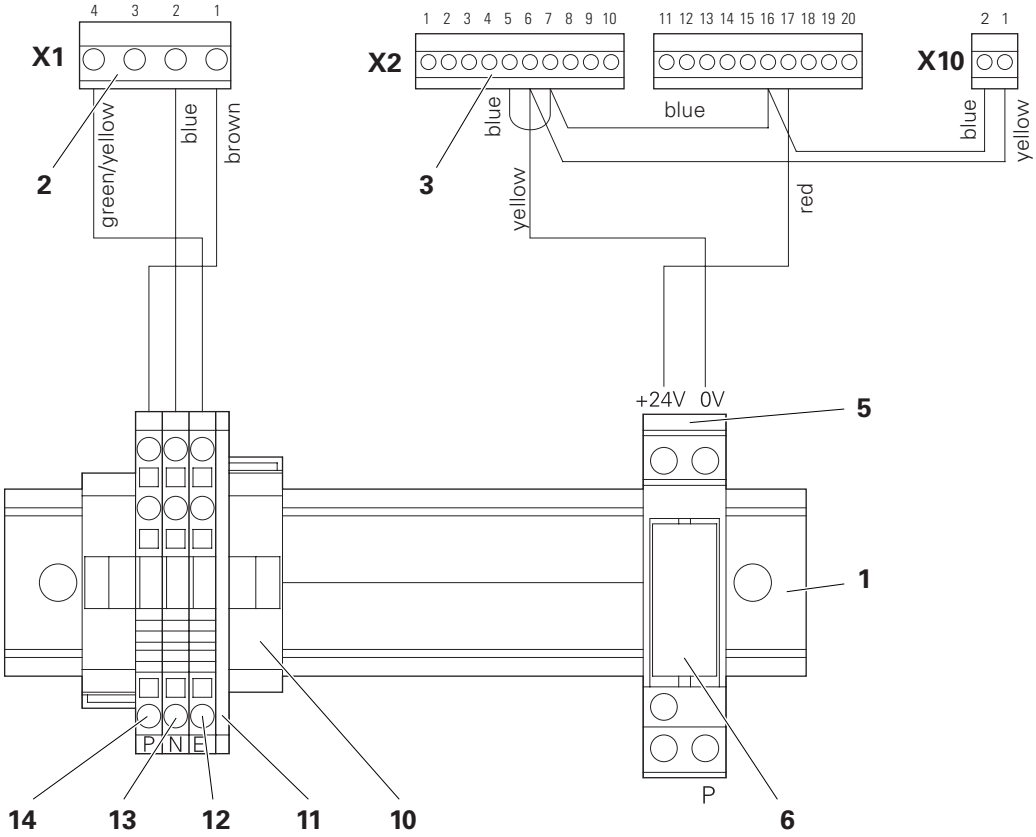

1 Carrier plate
2 Internal Mains cable
3 Contact block - Control voltage
5 Socket base
6 Relay - 24 VDC
10 Fixing piece
11 End piece
12 Contact clamp - PE3-L
13 Contact clamp - N3-LT
14 Contact clamp - P3-LT

Figure 10

CDD POSITION REGULATOR WITH CAN BUS

Front view

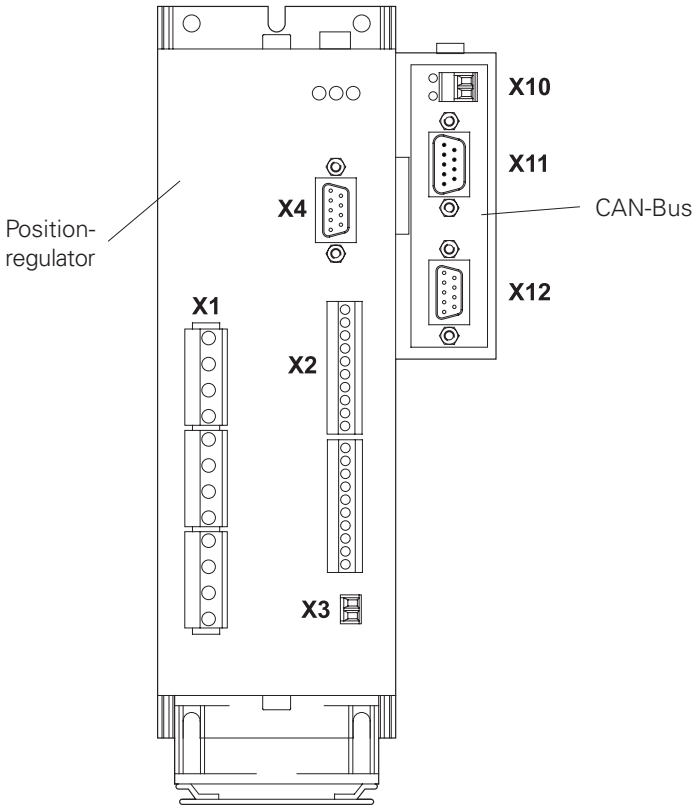

View from above

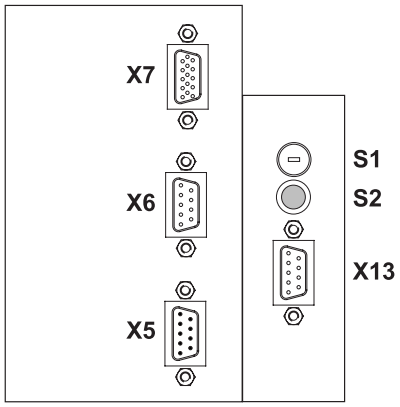

Position regulator:

X1 Load connection
X2 Control connection
X3 Motor winding temperature monitoring
(optional)
X4 RS 232 Interface
X5 Not occupied
X6 Not occupied
X7 Incremental Impulse Generator connection

CAN-Bus:

X10 24 VDC Power supply connection
X11 CAN Bus connection (Input)
X12 CAN Bus connection (Output)
X13 Not occupied
S1Address - (Customer specific)
Hex. 1-F / Dec. 1-15
S2Address - Factory setting (Sealed)

Figure 11

SPARE PARTS LIST

ORDERING SPARE PARTS

When ordering spare parts for powder coating equipment, please indicate the following specifications:

1. Type, and serial number of the coating equipment.

2. Order number, quantity, and description of each spare part.

Example :

1. ***Type:*** *ZA 02* ***Serial no.:*** *XXXX XXXX*
2. ***Order no.:*** *344 389* ***Quantity:*** *8 pieces - Z Axis rollers*

Issued 08/03

ZA 02 RECIPROCATOR

	Type ZA 02-13 - complete	386 952
	Type ZA 02-18 - complete	386 960
	Type ZA 02-23 - complete	386 979
	Type ZA 02-28 - complete	386 987
1	Base - complete:	
	Type ZA 02-13	386 871
	Type ZA 02-18	386 880
	Type ZA 02-23	386 898
	Type ZA 02-28	386 901
2	Drive unit - complete - See Drive - complete	
3	Clamp profile - SS	386 820
4	Clamp profile - GS	386 839
5	Cable bush - 2+2	386 847
6	Gasket	386 855
9	Service cover	386 448
10	Switch plate	386 464
11	Switch lever	386 456
12	Service cover	386 472
13	Service cover	386 480
15	Panel - front:	
	ZA 02-13	386 545
	ZA 02-18	386 553
	ZA 02-23	386 561
	ZA 02-28	386 570
16	Panel - sides:	
	ZA 02-13	386 502
	ZA 02-18	386 510
	ZA 02-23	386 529
	ZA 02-28	386 537
18	Guide plate - See Toothed Wheel Assembly	
19	Tensioning screws - See Toothed Wheel Assembly	
20	Locking plate - See Toothed Wheel Assembly	
21	Toothed wheel spindle - See Toothed Wheel Assembly	
22	Toothed wheel - See Toothed Wheel Assembly	
23	Spacer ring - Ø 28 / Ø 31.9 x 11 mm - See Toothed Wheel Assembly	
24	Stop plate	386 782
25	Counter profile	386 774
26	Z Carriage - complete - See Z Carriage - complete	
27	Gun holder plate - complete	386 693
28	Toothed belt holder	386 707
29	Clamp plate	345 067
30	Heat sink	386 740
31	Gasket	386 758
32	Clamp plate	386 790
33	Cable connection holder	386 715

wear part
***** indicate length required

(Cont.)

Issued 08/03

ZA02 Reciprocator (Cont.)

34	Cover plate	386 723
35	Cover plate	386 731
40	Flange bearing - Ø 25 mm	264 210
41	Rubber buffer - Ø 35 x 40 mm - M8	211 664**#**
42	Toothed belt - See Toothed Wheel Assembly	
43	Ball bearing - Ø 15 / 32 x 9 - See Toothed Wheel Assembly	
50	Position regulator	264 148**#**
51	CAN-Bus for Regulator	264 156
52	Brake resistor - 100 Ohm / 400	264 172
72	Eye bolt - M10 x 60 mm - See Toothed Wheel Assembly	
73	Ring screw - M16 - See Toothed Wheel Assembly	

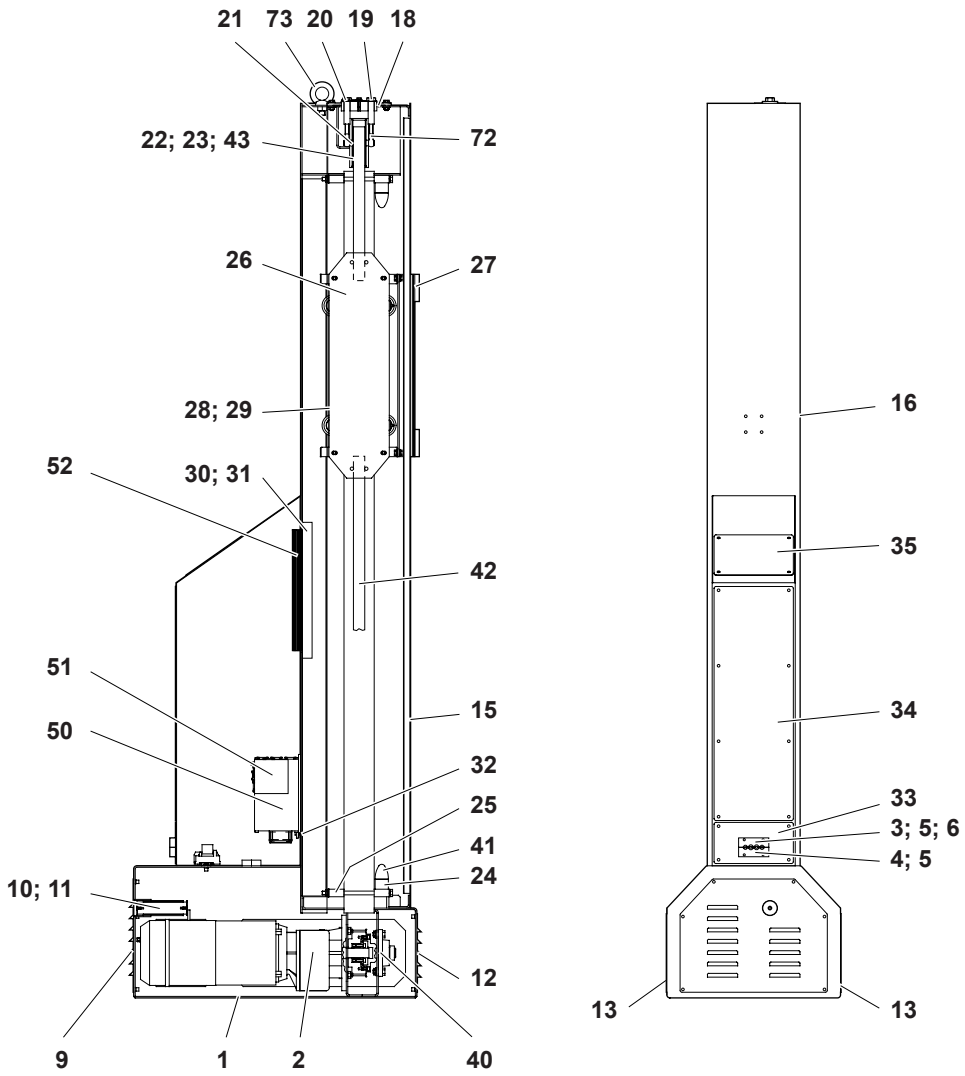

wear part
***** indicate length required

Figure 12

TOOTHED WHEEL ASSEMBLY (UPPER)

18	Guide plate	386 588
19	Tensioning screw	386 596**#**
20	Locking plate	386 634
21	Toothed wheel spindle	386 766
22	Toothed wheel	386 600
23	Spacing ring - Ø 28 / Ø 31.9 x 11 mm	386 618
42	Toothed belt	103 730**#***
	ZA 02-13 - L = 4.215 m	
	ZA 02-18 - L = 5.215 m	
	ZA 02-23 - L = 6.215 m	
	ZA 02-28 - L = 7.215 m	
43	Ball race - Ø 15 / 32 x 9 mm	241 709
44	C-ring - I-32	245 780
45	O-ring - A-15	233 617
72	Eye bolt - M10 x 60 mm	264 202
73	Ring bolt - M16	264 415

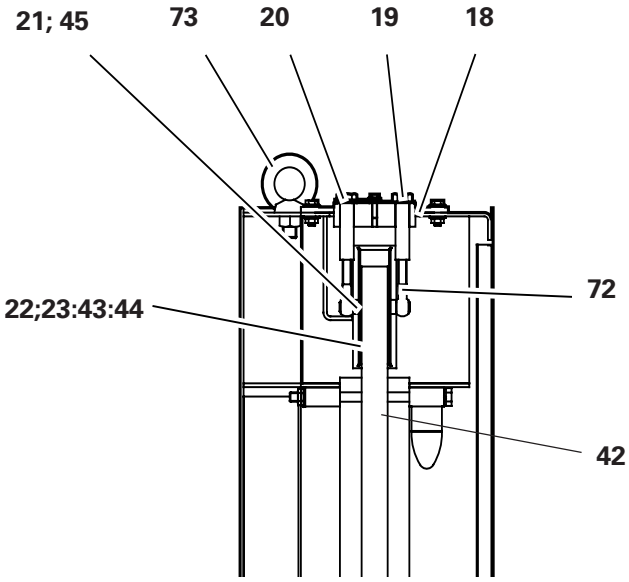

wear part
***** indicate length required

Figure 13

Z CARRIAGE - COMPLETE

1	Carriage - Fixed side	386 677
2	Carriage - Adjustable side	386 685
3	Roller - complete	307 165**#**
4	Spacer	308 013
5	Axle bolt - M10 x 110 mm	214 221
6	Axle bolt - M10 x 100 mm	214 213
7	Shake-proof nut - M10 - black	234 656
8	Washer - Ø 10.5 x 21 x 2 mm	215 821
9	Grubscrew - M5 x 16 mm	237 744
10	Nut - M5	205 150

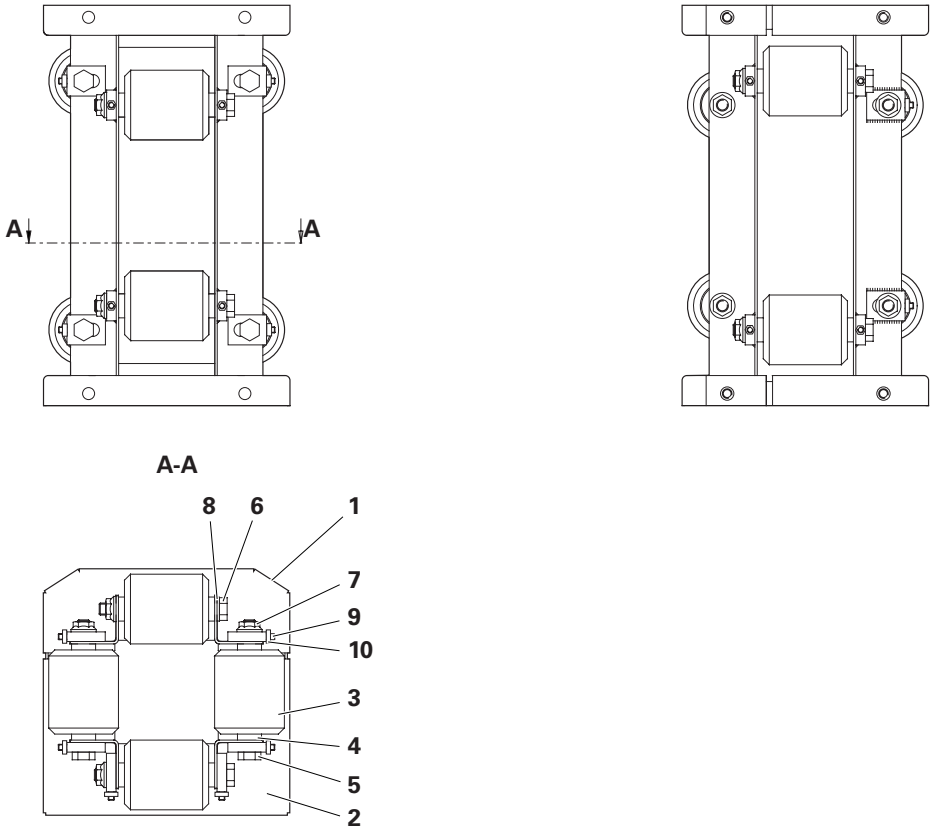

wear part

Figure 14

DRIVE UNIT - COMPLETE - ZA 02 RECIPROCATOR

	Drive Unit - complete (with Incremental pulse generator and cable)	386910**#**
1	Motor drive unit with Incremental pulse generator and cable, (without Items **2**, **3**, **4**, **8**, and **10**) - complete	386928**#**
2	Toothed wheel - lower	386642
3	Bearing journal	386650
4	Spacer ring - Ø 25.2 / Ø 30 x 5 mm	386626
5	Motor cable - ZA 02 - L = 1.25 m	387150
6	Connection cable - Brake - ZA 02	387177*****
8	Clamping collar - Ø 25 / 50 x 22 mm	264199
9	Lead-through - PG16 / Ø 8-15 mm	204366
10	Cylinder screw - M6 x 12 mm	216402
11	Incremental pulse generator	264652

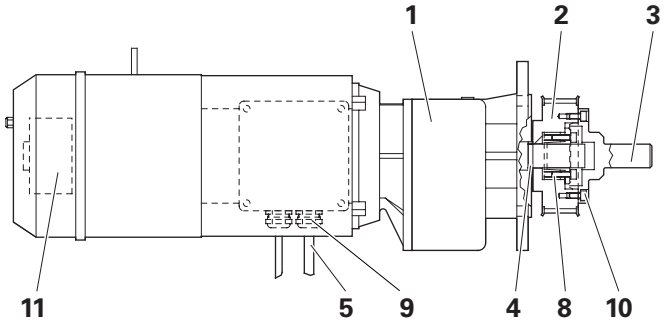

wear part
***** indicate length required

Figure 15

ELECTRICAL CONNECTIONS - ZA 02 RECIPROCATOR

1	Carrier plate - TS35-150	386 804
2	Internal Mains cable - ZA 02	387 142
3	Cable set - Control current - ZA 02	387 185
5	Socket base with 1UK Type 95.63	250 473
6	Relay - 24 VDC - 1UK	250 961**#**
10	Stop piece - 2.5 mm2	238 368
11	End piece - Base clamp - 3-P	241 660
12	Connecting plate - 0.25 mm2 - PE3-L	241 652
13	Connecting plate - 0.25 mm2 - N3-LT	241 644
14	Connecting plate - 0.25 mm2 - P3-L	241 636

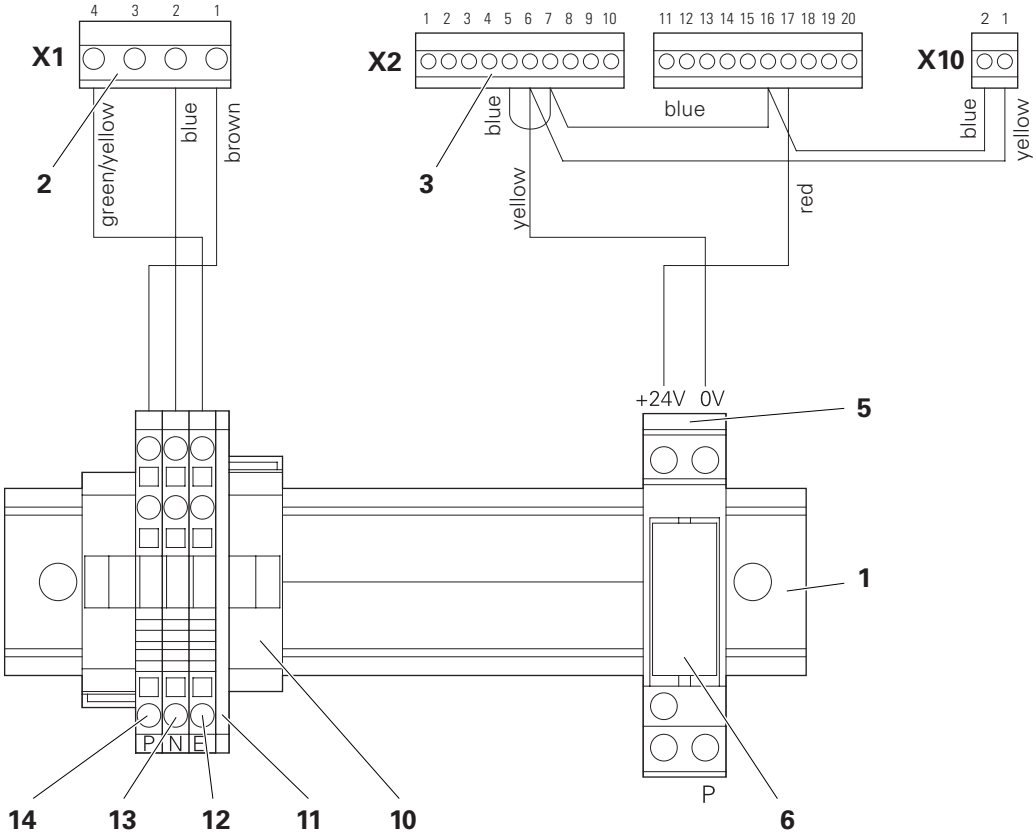

wear part

Figure 16

CDD POSITION REGULATOR

1	Position regulator CDD	264 148
2	CAN-Bus	264 156
3	CAN-Bus Cable - Powder Centre - L=2.0 m (not shown)	384 895
4	CAN-Bus Cable - Connection ZA-XT Axis - L=0.4 m (not shown) [Connection X11 (Input) - X12 (Output)	386 995
5	CAN-Bus Cable - Axis - L=10 m (not shown) [Station connection when multiple axes fitted]	387 096
6	CAN-Bus Cable - Axis - L=20 m (not shown) [Station connection when multiple axes fitted]	387 100
7	Cable - ZA 02 Axis (Conn. X1) - L=0.5 m (not shown)	387 142
8	Cable - XT 08 Axis (Conn. X1) - L=0.7 m (not shown)	387 630

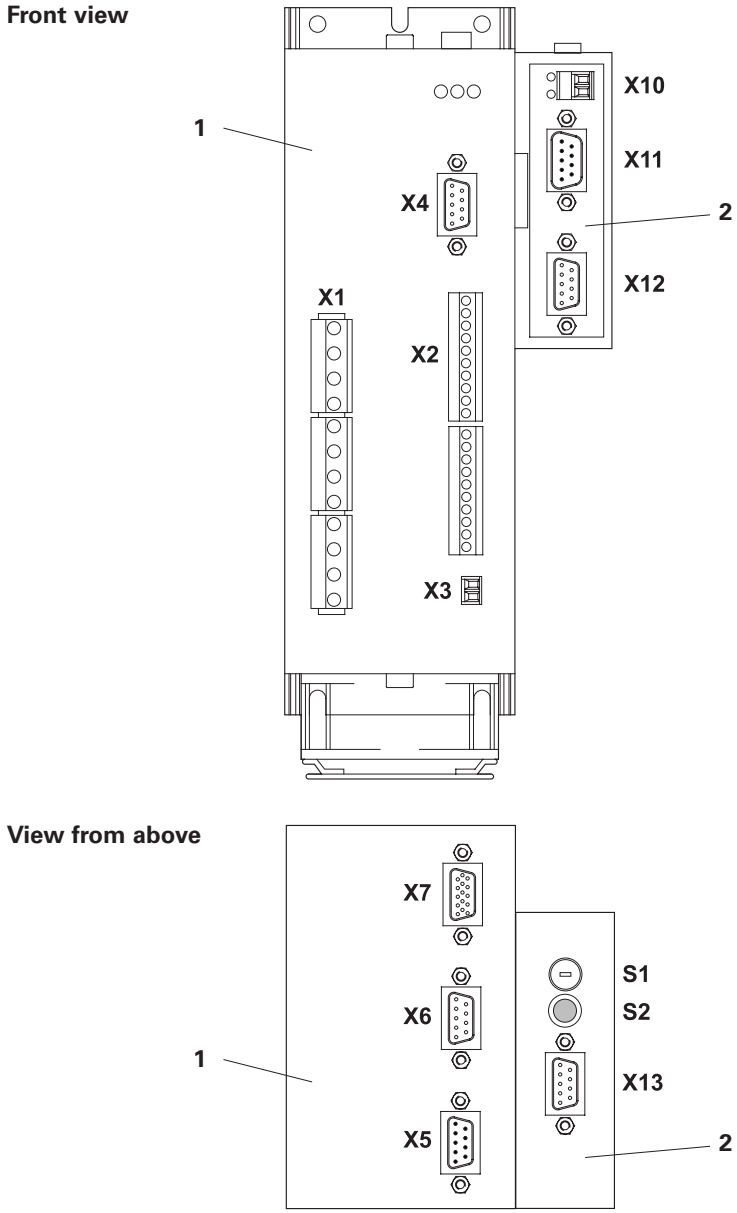

Figure 17

GUN HOLDERS

⚠ **NOTE**

The following examples show a possible configuration of the gun holders. Please contact the ITW Gema Service Department in the case of special configurations!

Gun holder for 1-4 guns

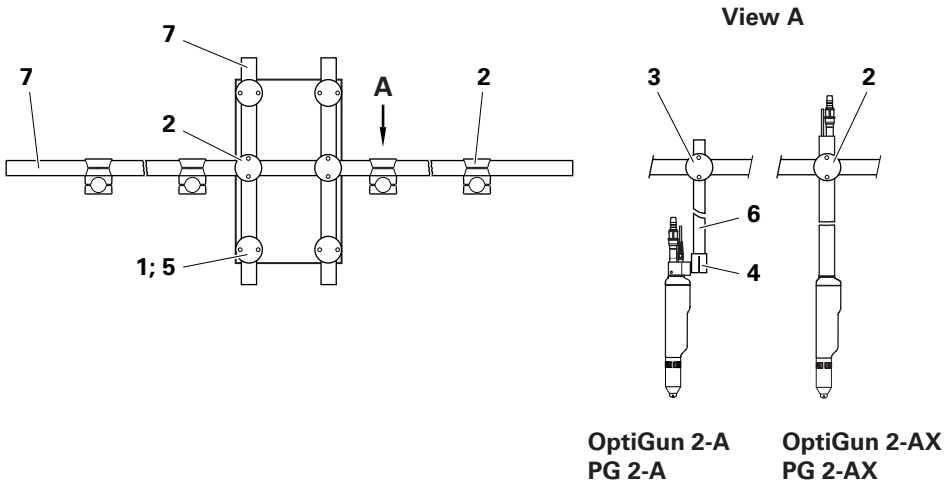

1	Clamp element-half (order by pairs)	363 987
2	Cross clamping element - Ø 40 / 40 mm	363 910
3	Cross clamping element - Ø 40 / 30 mm	363 936
	Cross clamping element - Ø 30 / 30 mm	363 952
4	See "Gun fixtures" etc.	
5	Allen screw - M8 x 50	235 113
6	Tube - Ø 30 x 600 mm	337 528
	Tube - Ø 30 x 800 mm	337 536
	Tube - Ø 30 x 1000 mm	337 544
	Tube - Ø 30	103 306*
6.1	Tube grommet - Ø 30 mm for Pos. 6	236 373
7	Tube - Ø 40 x 600 mm	337 552
	Tube - Ø 40 x 1000 mm	337 560
	Tube - Ø 40 x 1500 mm	337 579
	Tube - Ø 40 x 2000 mm	337 587
	Tube - Ø 40	103 314*
7.1	Tube grommet - Ø 40 mm for Pos. 7	236 381

wear part
***** indicate length required

Figure 18

Gun holder for 5-8 guns

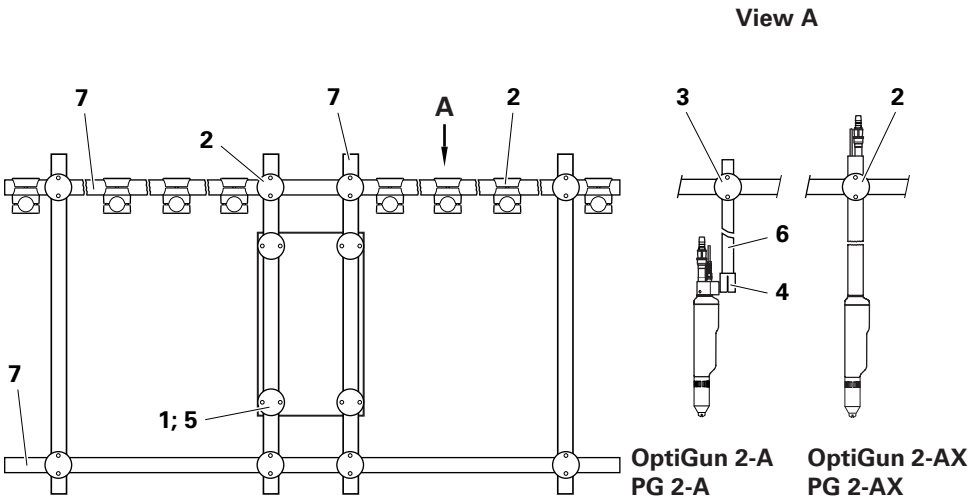

1	Clamp element-half (order by pairs)	363 987
2	Cross clamping element - Ø 40 / 40 mm	363 910
3	Cross clamping element - Ø 40 / 30 mm	363 936
	Cross clamping element - Ø 30 / 30 mm	363 952
4	See "Gun fixtures" etc.	
5	Allen screw - M8 x 50	235 113
6	Tube - Ø 30 x 600 mm	337 528
	Tube - Ø 30 x 800 mm	337 536
	Tube - Ø 30 x 1000 mm	337 544
	Tube - Ø 30	103 306*
6.1	Tube grommet - Ø 30 mm for Pos. 6	236 373
7	Tube - Ø 40 x 600 mm	337 552
	Tube - Ø 40 x 1000 mm	337 560
	Tube - Ø 40 x 1500 mm	337 579
	Tube - Ø 40 x 2000 mm	337 587
	Tube - Ø 40	103 314*
7.1	Tube grommet - Ø 40 mm for Pos. 7	236 381

wear part
***** indicate length required

Figure 19

Gun holder for 2 x 1-4 guns

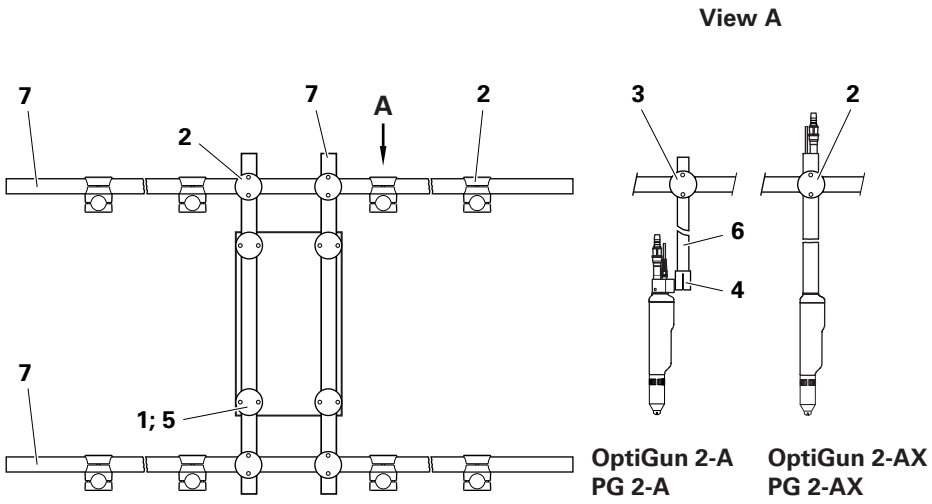

1	Clamp element-half (order by pairs)	363 987
2	Cross clamping element - Ø 40 / 40 mm	363 910
3	Cross clamping element - Ø 40 / 30 mm	363 936
	Cross clamping element - Ø 30 / 30 mm	363 952
4	See "Gun fixtures" etc.	
5	Allen screw - M8 x 50	235 113
6	Tube - Ø 30 x 600 mm	337 528
	Tube - Ø 30 x 800 mm	337 536
	Tube - Ø 30 x 1000 mm	337 544
	Tube - Ø 30	103 306*
6.1	Tube grommet - Ø 30 mm for Pos. 6	236 373
7	Tube - Ø 40 x 600 mm	337 552
	Tube - Ø 40 x 1000 mm	337 560
	Tube - Ø 40 x 1500 mm	337 579
	Tube - Ø 40 x 2000 mm	337 587
	Tube - Ø 40	103 314*
7.1	Tube grommet - Ø 40 mm for Pos. 7	236 381

wear part
***** indicate length required

Figure 20

Gun holder vertical

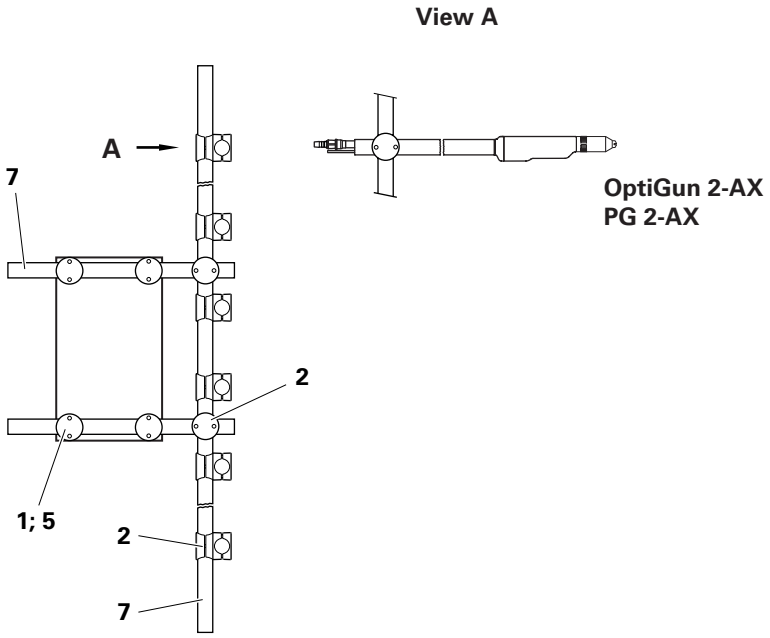

1	Clamp element-half (order by pairs)	363 987
2	Cross clamping element - Ø 40 / 40 mm	363 910
3	Cross clamping element - Ø 40 / 30 mm	363 936
	Cross clamping element - Ø 30 / 30 mm	363 952
4	See "Gun fixtures" etc.	
5	Allen screw - M8 x 50	235 113
6	Tube - Ø 30 x 600 mm	337 528
	Tube - Ø 30 x 800 mm	337 536
	Tube - Ø 30 x 1000 mm	337 544
	Tube - Ø 30	103 306*
6.1	Tube grommet - Ø 30 mm for Pos. 6	236 373
7	Tube - Ø 40 x 600 mm	337 552
	Tube - Ø 40 x 1000 mm	337 560
	Tube - Ø 40 x 1500 mm	337 579
	Tube - Ø 40 x 2000 mm	337 587
	Tube - Ø 40	103 314*
7.1	Tube grommet - Ø 40 mm for Pos. 7	236 381

Figure 21

GUN FIXTURES AND COLLISION PROTECTION

1	Gun fixture - Ø 30 mm	350 150
2	Gun fixture - Ø 40 mm	354 317
3	Gun fixture - Ø 40 mm (Transverse)	356 670
4	Collision protection - Ø 30 mm (for ZA Axis)	364 215
5	Adapter piece complete - Ø 30 mm (for ZA Axis)	364 231
6	Collision protection - Ø 30 mm (for ZA Axis)	364 223
7	Adapter piece complete - Ø 30 mm (for ZA Axis)	364 240

Gun fixtures

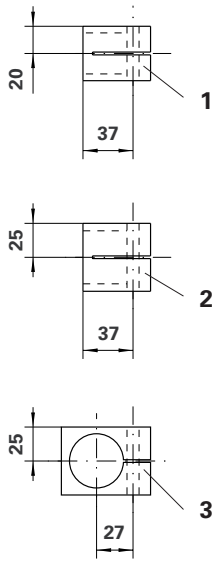

Collision protection

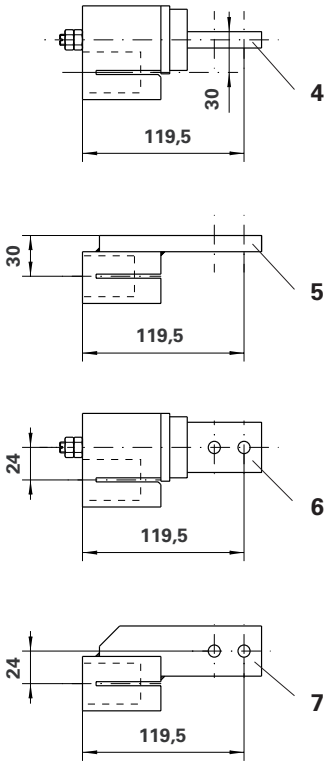

Figure 22

Printed in Switzerland

ITW Gema AG
Mövenstrasse 17
9015 St. Gallen
Switzerland

Phone: +41-71-313 83 00
Fax: +41-71-313 83 83
E-mail: info@itwgema.ch
Internet: www.itwgema.ch

Issued 08/03