En

Operating instructions and spare parts list

UA02
Powder Gun Axis

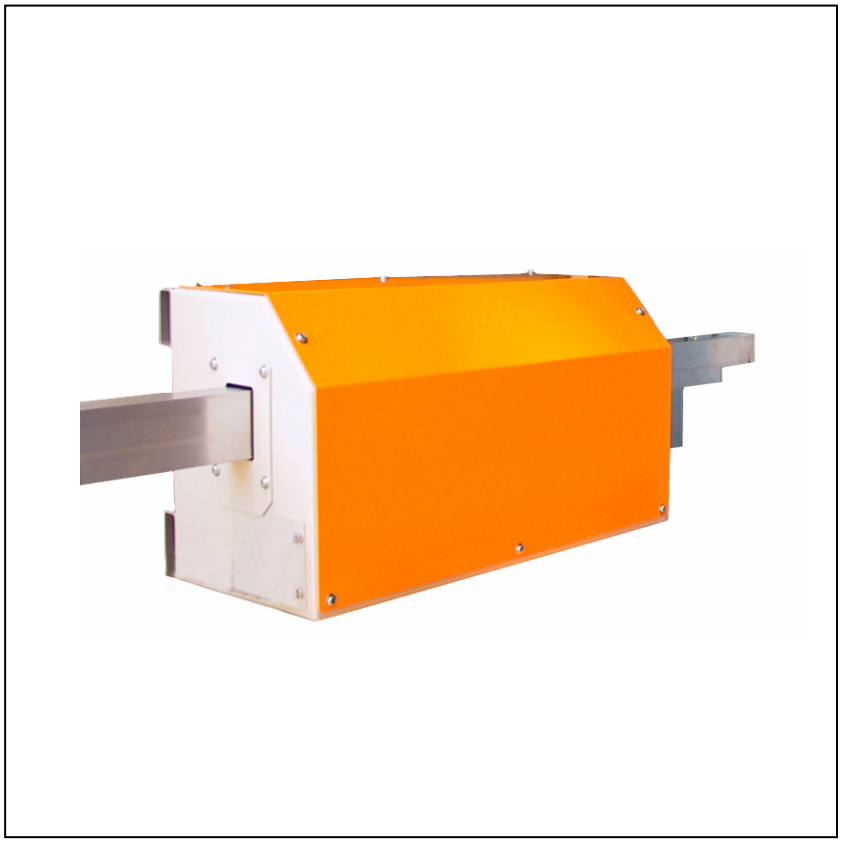

Gema

Documentation UA02 Powder Gun Axis

Printed in Switzerland

Gema Switzerland GmbH
Mövenstrasse 17
9015 St. Gallen
Switzerland

Phone: +41-71-313 83 00
Fax.: +41-71-313 83 83

E-Mail: info@gema.eu.com
Homepage: www.gemapowdercoating.com

Table of contents

General safety regulations

This chapter sets out the fundamental safety regulations that must be followed by the user and third parties using the UA02 Powder Gun Axis.

These safety regulations must be read and understood before the UA02 is put into operation.

Safety symbols (pictograms)

The following warnings with their meanings can be found in the Gema operating instructions. The general safety precautions must also be followed as well as the regulations in the operating instructions.

DANGER!
danger due to live electricity or moving parts. Possible consequences: Death or serious injury

WARNING!
Improper use of the equipment could damage the machine or cause it to malfunction. Possible consequences: minor injuries or damage to equipment

INFORMATION!
useful tips and other information

Conformity of use

1. The UA02 powder gun axis is built to the latest specification and conforms to the recognized technical safety regulations and is designed for the normal application of powder coating.
2. Any other use is considered as non-conform. The manufacturer is not responsible for any damage resulting from this - the risk for this is assumed by the user alone! If the UA02 is to be used for other purposes or other substances outside of our guidelines then Gema Switzerland GmbH should be consulted.
3. Observance of the operating, service and maintenance instructions specified by the manufacturer is also part of conformity of use. The UA02 powder gun axis should only be used, maintained and started up by trained personnel, who are

informed about and are familiar with the possible hazards involved.

4. Start-up (i.e. the execution of a particular operation) is forbidden until it has been established that the UA02 powder gun axis has been set up and wired according to the guidelines for machinery (2006/42 EG). EN 60204-1 (machine safety) must also be observed.
5. Unauthorized modifications to UA02 powder gun axis exempts the manufacturer from any liability from resulting damage.
6. The relevant accident prevention regulations, as well as other generally recognized safety regulations, occupational health and structural regulations are to be observed.
7. Furthermore, the country-specific safety regulations also must be observed.

Product specific security measures

- The installation work, to be done by the customer, must be carried out according to local regulations
- Before starting up the plant a check must be made that no foreign objects are in the booth or in the ducting (input and exhaust air)
- It must be observed, that all components are grounded according to the local regulations, before start-up
- The UA02 powder gun axis may only be switched on and operated after careful reading of this manual. Incorrect operating of the horizontal axis can lead to personal injuries as well as damage to the table or other parts.
- All moving axes must be secured by security gates before start-up and during operation (see the local regulations)!
- Before start-up, check that the axis, and the rack are grounded!
- Safety devices may not be dismantled, bypassed or ignored! Open covers hide the danger of injury.
- Safety devices must be held in perfect functioning and may be not put out of operation
- Maintenance works on the Powder gun axis may take place only when the plant is stopped. Switch off the plant, lock the main switch and remove the key!

Safety concept

- TheUA02 powder gun axis is a constituent part of the system and is thus integrated into the safety system of the plant. For the use outside of the safety concept, corresponding measures must be taken
- Only original Gema spare parts may be used! Any warranty claim for damage caused by the use of foreign parts is void.
- Repairs on the Powder gun axis may only be carried out by Gema trained personnel!

About this manual

General information

This operating manual contains all the important information which you require for the working with the UA02 powder gun axis. It will safely guide you through the start-up process and give you references and tips for the optimal use of your new powder coating system.

Information about the function mode of the individual system components - booth, gun control unit, manual gun or powder injector - should be referenced to their corresponding documents.

Function description

Field of application

Die UA02 powder gun axis serves to move an automatic powder gun. Through the corresponding CR03 Gematic Axis control unit the UA02 axis can position the automatic powder gun in the corresponding position for the required coating condition to the object. With the UA02 powder gun axis any assembly position is possible (*horizontal - inclined - vertical*). The stroke registration is made through an incremental pulse generator. It must also be observed that the area of movement of the UA02 Axis and its rack are fenced off, by the customer, according to local regulations.

Product identification

The label of the powder gun axis is found in a separate switch cabinet, above the frequency converter.

The following specifications can be taken from it:

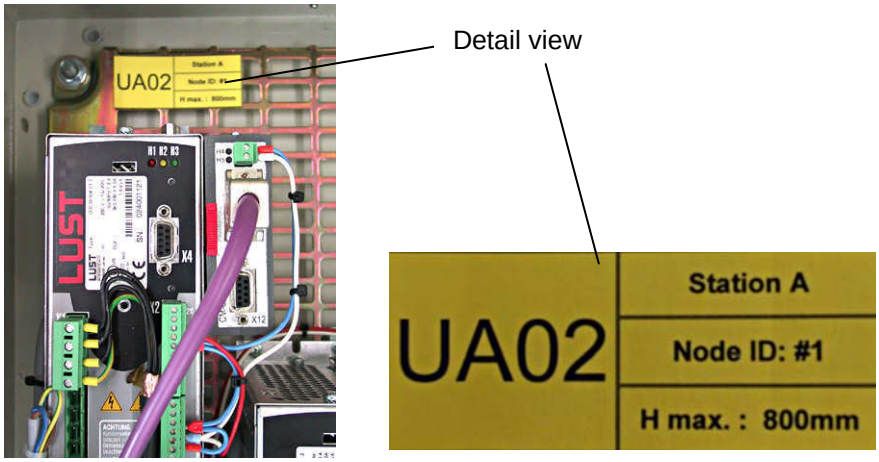

UA02 axis - Label in the Switch cabinet

- Station address
- Node ID
- max. stroke

Structure and function

Mechanical structure

The UA02 Axis consists of the following parts:

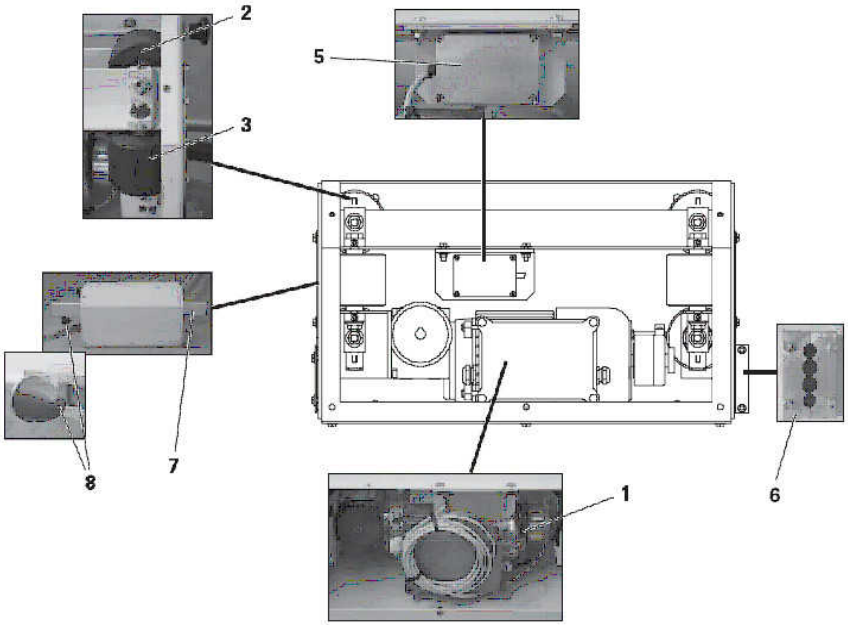

Construction of UA02 Axis

1	Drive unit	6	Cable connection
2	Support roller	7	Rack - complete
3	Guide roller	8	Rubber buffer
5	Connecting box		

Function description

- The UA02 powder gun axis is a feed axis, in order to accommodate the powder gun position to coat the parts.
- The position registration of the UA02 powder gun axis takes place through an incremental pulse generator built into the drive unit.
- The feed movement takes place through a built in drive unit. (*AC motor with spur gear drive and incremental pulse generator*) and the rack.

Safety and monitoring devices

All moving axes must be secured by security gates before start-up and during operation (see the local regulations)!

Technical data

UA02 Powder Gun Axis

General information

UA02 Powder Gun Axis	
Max. load	max. 2 automatic powder guns, fitted symmetrically
Stroke speed	0,05 - 0,6 m/sec
Drive unit	AC motor
Position detection	Incremental pulse generator
Protection type:	IP54
Control unit	Gematic CR03
Direction of movement	Optional (horizontal - inclined - vertical)

Start-up

Setting values/parameters

The exact Parameters are input in the CR03 Gematic Control unit.
(*for more information see „CR03 Gematic Operating Instructions“*)

Assembly and set-up

Attention!
During the assembly work, the connection cable between the drive unit and the control unit may not be connected! All assembly works must be checked by trained personnel!

When assembling the UA02 powder gun axis, the following points are to be observed:

- The drive housing must be fitted in the position intended for it on a support, respectively, on a reciprocator.
- The rack must be positioned slowly in the drive housing, so that the drive wheels or the gears are not knocked.
- The rubber profile supplied must be fitted on the rack as buffers.
- When fitting the rack it must be observed that the rack can move freely through the whole travel range.

UA02 Axis Connection

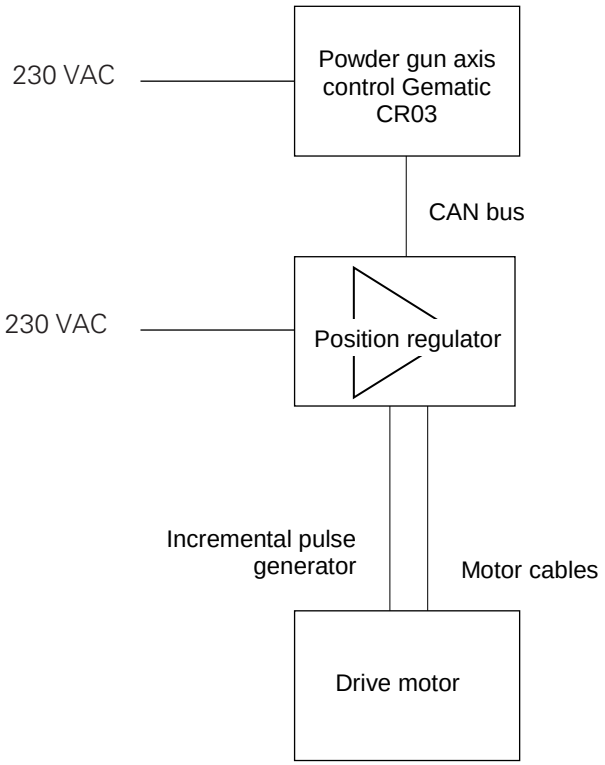

Schematic diagram UA02 connections

Place of installation and operation

Die Axis **(1)** is fitted mainly on the ZA02 vertical axis **(2)**. The power supply is found in a separate control cabinet **(3)**.

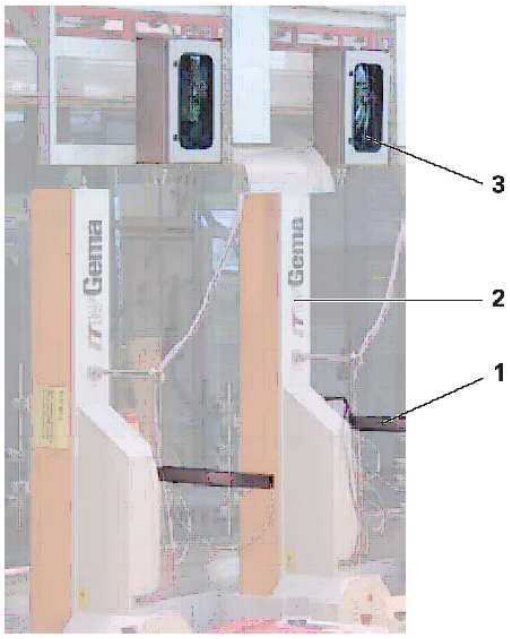

Place of installation and operation

Preparation for start-up

Danger!
Never stand too close to the moving axes during operation. Danger of accident!

Attention!
The power of the horizontal axis is much stronger than that of a human being! All axes must be secured against admittance during operation (see local regulations).

Before start-up the feed axis, the following points must be observed:

- Check the maximum stroke length corresponding to the function of the rack *(see CR03 Gematic Operating Instructions, Section Axis parameter SP30)*
- All screw connections have to be firmly tightened
- No play, and light running of the rack
- free movement of the rack along its whole length of travel
- Check the cable and hose layout, so that no damages can occur during the entire travel distance
- Check the cable and hose layout also with other movement sequences, so that no damages can occur
- Lock up the area of movement of the rack according to the local safety regulations, so that no persons are at risk

Operation

Thee UA02 Axis served exclusively by the CR03 Control unit (*see CR03 Gematic Control unit Operating Instructions*).

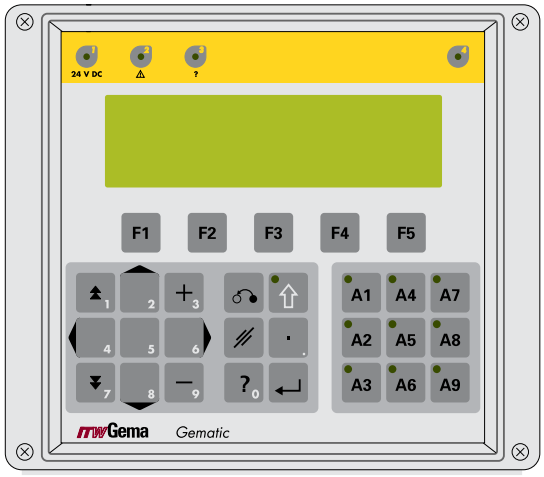

Maintenance

Attention!
Before maintenance works take place, it must be ensured that the axis movement cannot be switched on by a third party!

Maintenance schedule

The UA02 Axis is designed to be maintenance-free and correspondingly, requires little maintenance work.

The maintenance plan contains checking and maintenance notes for single shift operation of the axis. Wear checks, maintenance and repair must be adapted accordingly when operation conditions deviate.

Interval	Maintenance and inspection works
Weekly	Clean the rack of powder and check for wear
	Blow off the tooth profile of the rack and check for wear
Monthly	Check the rack play, and if necessary readjust *(see Section „Setting the guide and support rollers“)*
	Check the cable and hose connections if they are firmly fitted and for wear

Setting the guide and support rollers

1. Switch off the electric power
2. Remove the panels *(Housing and Service cover)*
3. Loosen the lock nut (**1**) on the grub screw (**2**)
4. Loosen the nut **(3)** from the running roller screw
5. Adjust the pressure on the roller with the grub screw so that the roller can be moved only slightly with manual pressure
6. Tighten the screws
7. Tighten the grub screw and secure it. Check if the rollers can be moved slightly
8. Fit the panels again and fasten them firmly

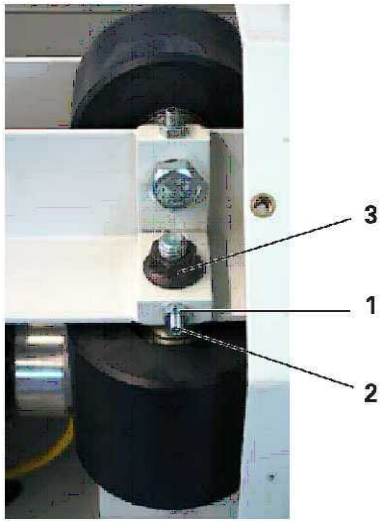

Setting the guide and support rollers

Troubleshooting

General information

Attention!
Faults may only be eliminated by trained personnel and it must be ensured that the axis movements cannot be switched on by a third person.

Fault	Causes	Troubleshooting
Axis does not move	Rack is blocked, runs stiff	Check guide and support rollers and reset if necessary (see Section "Setting the guide and support rollers“)
Axis travels to the zero position, onto the rubber buffer	„lower“ Position incorrectly set	Set position correctly See CR03 Gematic reciprocator control Operation manual
Axis travels onto the rubber buffer, when max. travel distance is set	Parameter SP30 „Travel distance“ incorrectly set	Adjust Parameter See CR03 Gematic reciprocator control Operation manual
Rack vibrates strongly or rollers not pressed tight on the rack	Roller tolerance too great	Reset guide and support rollers (see Section „Setting the guide and support rollers“)
Error displayed on the CR03 Gematic Control unit	Incremental pulse generator signal not present	Check connection cable Check the firm seating of the collet of the incremental pulse generator Check the firm seating of the sleeve between the Incremental pulse generator and the motor axis

Spare parts list

Ordering spare parts

When ordering spare parts for powder coating equipment, please indicate the following specifications:

- Type and serial number of your powder coating equipment
- Order number, quantity and description of each spare part

Example:

- **Type** UA02
  Serial number 1234 5678
- **Order no.** 203 386, 1 piece, Clamp - Ø 18/15 mm

When ordering cable or hose material, the required length must also be given. The spare part numbers of this yard/meter ware is always marked with an *****.

The wearing parts are always marked with a #.

All dimensions of plastic hoses are specified with the external and internal diameter:

Example:

Ø 8/6 mm, 8 mm outside diameter (o/d) / 6 mm inside diameter (i/d)

WARNING!
Only original Gema spare parts should be used, because the explosion protection will also be preserved that way. The use of spare parts from other manufacturers will invalidate the Gema guarantee conditions!

Powder gun axis - Spare parts list

2	Housing cover	389 536
3	Service cover	389 544
4	Cover plate	389 846
5	Plate	386 863
6	Gasket	386 855
7	Cable connection - complete	388 408
8	Guide roller - complete	387 878#
9	Support roller - complete	387 860#
11	Drive unit - complete	389 501
12	Connecting socket - complete	389 870

Wearing part

***** Please indicate length

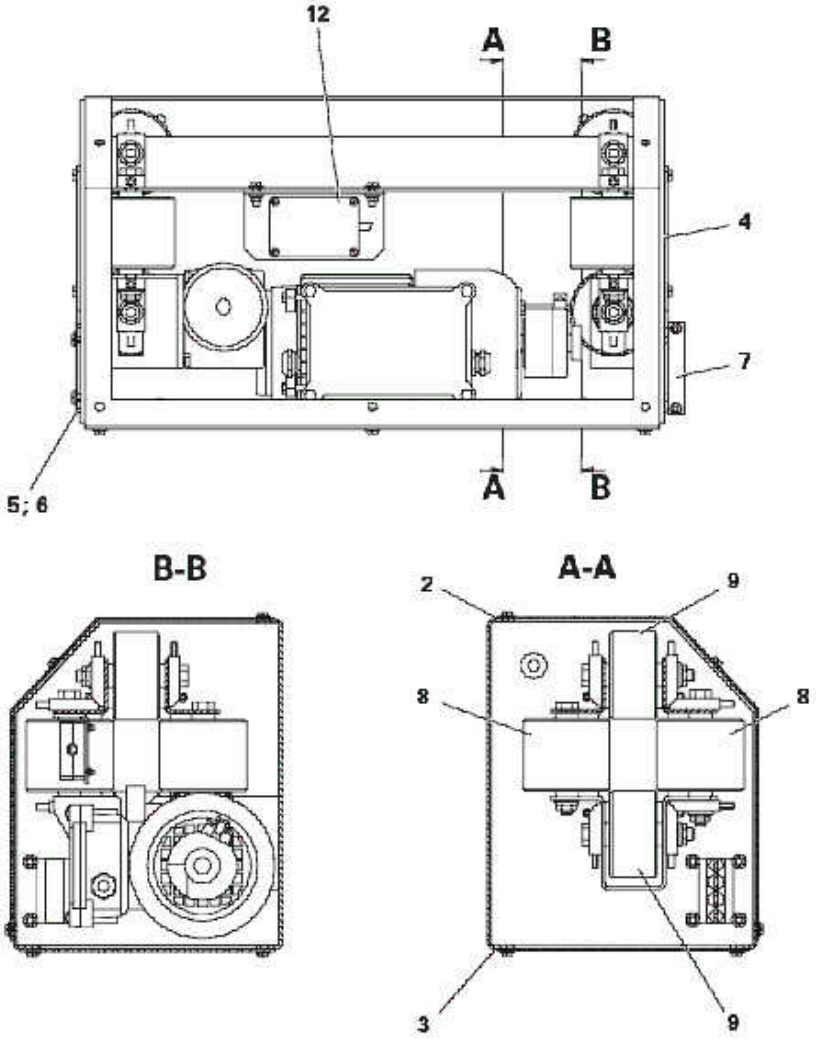

Drive unit - Spare parts list

1	Motor drive unit - complete	1000 533
2	Drive gear	387 924#
5	Incremental pulse generator HG 660 C33	264 652
10	Grub screw I-6kt M4x8 mm	234 958

Wearing part

***** Please indicate length

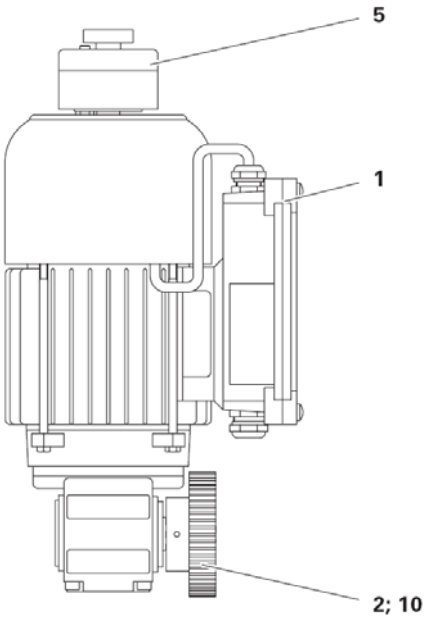

Rack - Spare parts list

1	Rack profile - complete	According to order
2	Buffer bracket	390 429
3	Clamping element	390 437
5	Rubber buffer - Ø 35x40 mm, M8/A	211 664#

Wearing part

***** Please indicate length