1011 505 **En**

Operating instructions and spare parts list

Powder management center OptiCenter OC04

Translation of the original operating instructions

Gema

Documentation – OptiCenter OC04

For the latest information about Gema products, visit
www.gemapowdercoating.com.

For information regarding patents, visit
www.gemapowdercoating.com/patents or
www.gemapowdercoating.us/patents.

Printed in Switzerland

Gema Switzerland GmbH
Mövenstrasse 17
9015 St.Gallen
Switzerland

Phone: +41-71-313 83 00
Fax.: +41-71-313 83 83

E-mail: info@gema.eu.com

Table of contents

General safety regulations 5

Safety symbols (pictograms) 5
Intended use 5
Product specific safety information 6
General information 6
Installation 7
Grounding 7
Operating the equipment 7
Inspection 7
Repairs 8

About this manual 9

General information 9

Product description 11

Field of application 11
Utilization 11
Reasonably foreseeable misuse 12
Technical Data 12
Powder transport 12
Electrical data 12
Pneumatic data 12
Dimensions 13
Processible powders 13
Sound pressure level 13
Rating plate 13
Design and function 15
Overall view 15
Compressed air indicators 16
Powder container 17
PS07 Sieve machine (option) 17
Principle of operation 18
Powder circuit 18

Start-up 19

Set-up and assembly 19
Preparation for start-up 19
Compressed air supply 19
Grounding of the powder management center 20

Operation 21

Push button switches 21
Push button functions 21
Operating modes 23
General information 23
Coating without powder recovery (spray to waste) 23

Coating with powder recovery ... 23
Cleaning / color change (clean) ... 23

Coating operation **25**

Before switching on ... 25
Starting up the OptiCenter OC04 ... 25
Start-up ... 25
Switching off the OptiCenter OC04 (after each work day) ... 27

Cleaning / color change **29**

Cleaning operating mode ... 29
Cleaning procedure ... 29
Coating after the cleaning ... 32

Settings **33**

Troubleshooting **35**

General information ... 35

Maintenance **37**

Daily after longer working interruptions and at the end of shift ... 37
Check weekly ... 37

Decommissioning, storage **39**

Introduction ... 39
Safety rules ... 39
Requirements on personnel carrying out the work ... 39
Storage conditions ... 39
Storage duration ... 39
Space requirements ... 39
Physical requirements ... 39
Hazard notes ... 40
Shut-down ... 40
Decommissioning ... 40
Cleaning ... 40
Disassembly/attachment of transport safety devices ... 40
Packing ... 40
Identification ... 40
Maintenance during storage ... 40
Maintenance schedule ... 40
Maintenance works ... 40
Return to service ... 41
Commissioning following storage ... 41

Packing, transport **43**

Introduction ... 43
Safety rules ... 43
Requirements on personnel carrying out the work ... 43
Packing material ... 44
Transport ... 44
Data concerning goods to be transported ... 44
Mode of transportation ... 44
Loading, transferring the load, unloading ... 45

Spare parts list **47**

Ordering spare parts 47
OptiCenter 48
Powder container – complete 49
Powder container – Fluidizing plate 50
Powder container – Level sensor 51
OptiCenter – Pneumatics 52
Main air supply 53
Powder container – Pneumatic manifold 54
Shuttle valves pool 55
Powder container pneumatics 56
Monocyclone – Powder transport 57
Monocyclone – Powder transport connection 58

General safety regulations

This chapter sets out the fundamental safety regulations that must be followed by the user and third parties using the OptiCenter OC04.

These safety regulations must be read and understood before the OptiCenter OC04 is put into operation.

Safety symbols (pictograms)

The following warnings with their meanings can be found in the Gema Switzerland operating instructions. The general safety precautions must also be followed as well as the regulations in the operating instructions.

DANGER!
danger due to live electricity or moving parts. Possible consequences: Death or serious injury

ATTENTION!
improper use of the equipment could damage the machine or cause it to malfunction. Possible consequences: minor injuries or damage to equipment

INFORMATION!
Useful tips and other information

Intended use

- The OptiCenter OC04 is built to the latest specification and conforms to the recognized technical safety regulations and is designed for the normal application of powder coating.
- Any other use is considered non-compliant. The manufacturer is not responsible for any incorrect use and the risks associated with such actions are assumed by the user alone. If the OptiCenter OC04 is to be used for other purposes or other substances outside of our guidelines then Gema Switzerland GmbH should be consulted.
- Observance of the operating, service and maintenance instructions specified by the manufacturer is also part of conformity of use. The OptiCenter OC04 should only be used, maintained and

started up by trained personnel, who are informed about and are familiar with the possible hazards involved.

- Start-up (i.e. the execution of a particular operation) is forbidden until it has been established that the OptiCenter OC04 has been set up and wired according to the guidelines for machinery (2006/42 EG). EN 60204-1 (machine safety) must also be observed.
- Unauthorized modifications to the OptiCenter OC04 exempt the manufacturer from any liability from resulting damage.
- The relevant accident prevention regulations, as well as other generally recognized safety regulations, occupational health and structural regulations are to be observed.
- Furthermore, the country-specific safety regulations also must be observed.

Explosion protection	Protection type
CE Ex II 3 D	IP54

Product specific safety information

General information

The OptiCenter OC04 is a constituent part of the system and is thus integrated into the safety system of the plant.

If it is to be used in a manner outside the scope of the safety concept, then corresponding measures must be taken.

NOTE:

For further information, see the more detailed Gema safety regulations!

Installation

The services and facilities to be provided by the customer should be installed according to local regulations.

Grounding

Check the grounding of the booth and the powder management center before every start-up. The grounding connection is customer specific and is fitted on the booth base, on the cyclone and on the powder management center. Also make sure that the workpieces, and all other systems are properly grounded.

Operating the equipment

In order to be able to operate the equipment safely, it is necessary to be familiar with the safety regulations, the operational characteristics and functioning of the various plant units.

For this purpose, read the safety notes, this operating manual and the operating instructions of the plant control unit, before starting up the plant.

In addition, all further equipment-specific operating instructions, e.g. the OptiFlex and all additional components should also be read.

To obtain practice in operating the plant, it is absolutely essential to start the operation according to the operating instructions. Also, later on, they serve as a useful aid on possible malfunctions or uncertainty and will make many enquiries unnecessary. For this reason, the operating manual must always be available at the equipment.

Should difficulties arise, however, your Gema service center is always ready to assist.

Inspection

Before switching on the booth, check the following points (where applicable):

- No foreign material in the central suction unit in the booth and in the powder suction
- Sieve machine is connected to the cyclone separator, the clamp is tightly locked
- Pneumatic conduction and powder hose are connected to the dense phase conveyor

Repairs

Repairs must be carried out by trained personnel only. Unauthorized conversions and modifications can lead to injuries and damage to the equipment. The Gema Switzerland GmbH guarantee would no longer be valid.

NOTE:

We point out that the customer himself is responsible for the safe operation of the equipment! Gema Switzerland GmbH is in no way responsible for any resulting damage.

By carrying out repairs, the powder management center must be disconnected from the mains, according to the local safety regulations!

NOTE:

Only original Gema spare parts should be used! The use of spare parts from other manufacturers will invalidate the Gema guarantee conditions!

About this manual

General information

This operating manual contains all important information which you require for the working with the OptiCenter OC04. It will safely guide you through the start-up process and give you references and tips for the optimal use of your new powder coating system.

Information about the function mode of the individual system components - booth, axis, gun control unit, powder gun or powder injector - should be referenced to their enclosed corresponding documents.

DANGER:

Working without operating instructions

Working without operating instructions or with individual pages from the operating instructions may result in damage to property and personal injury if relevant safety information is not observed.

- ► Before working with the device, organize the required documents and read the section on "Safety regulations".
- ► Work should only be carried out in accordance with the instructions in the relevant documents.
- ► Always work with the complete original document.

Product description

Field of application

The OptiCenter OC04 Powder management center is conceived for simple and clean handling of the coating powder. It enables a semi-automated cleaning procedure and consequently a quick color change.

Utilization

The OptiCenter OC04 powder management center is suitable for use in multiple color plants as well as in single color plants.

As a part of the process controlled coating plant, the powder management center is laid out for semi-automatic operation.

Conveyance

- Processing the powder directly from the integrated powder container (manual powder filling)
- Integrated electrical and pneumatic control units
- Powder level monitoring by level sensor (option)

Cleaning

- Automatic internal cleaning of the injectors, powder hoses and guns
- Supply of the recovered powder
- The workplace and the environment remain clean
- No own exhaust system - the powder management center does not have its own exhaust system and will be therefore connected directly to the After Filter

Reasonably foreseeable misuse

- Use of moist powder
- Insufficient fluidization at the suction point
- Operation without the proper training

Technical Data

Powder transport

OptiCenter OC04	
Conveying performance (average value per gun)	200 g/min.
Recovery	max. 3.5 kg/min.

Electrical data

OptiCenter OC04	
Connected load	1x230 V
Frequency	50/60 Hz
Protection type	IP54

Pneumatic data

OptiCenter OC04	
Inlet pressure	min. 6.5 bar
Compressed air consumption during coating operation	15 Nm³/h
Compressed air consumption during cleaning (incl. powder container and guns)	350 Nm³/h
Compressed air consumption during cleaning of the PP06 hose to the cyclone	120 Nm³/h
Water vapor content of compressed air	max. 1.3 g/m³
Oil content of compressed air	max. 0.1 mg/m³

Dimensions

OptiCenter OC04	OC04	with AS10	with AS10+ICS02 /05
Base area (width x depth) (mm)	1140 x 1500	1700 x 1500	2600 x 1500
Overall height (mm)	2100 (2270 – PP06 connection)		
Weight (kg)	approx. 300 (without AS and ICS)		

Processible powders

OptiCenter OC04	
Plastic powder	yes
Metallic powder	yes

Sound pressure level

OptiCenter OC04	
Normal operation	<75 dB(A)
Cleaning operation mode	for a short time up to 95 dB(A)

The sound pressure level was measured while the unit was in operation; measurements were taken at the most frequent operator positions and at a height of 1.7 m from the ground.

The specified value is applicable only for the powder management center itself and does not take into account external noise sources or cleaning impulses.

The sound pressure level may vary, depending on the powder management center configuration and space constraints.

Rating plate

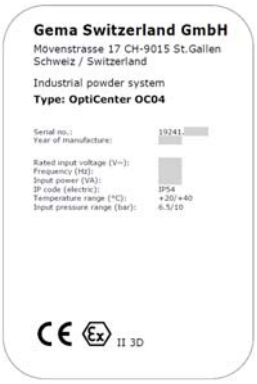

NOTE:

Fields with a gray background contain contract-specific data!

Design and function

Overall view

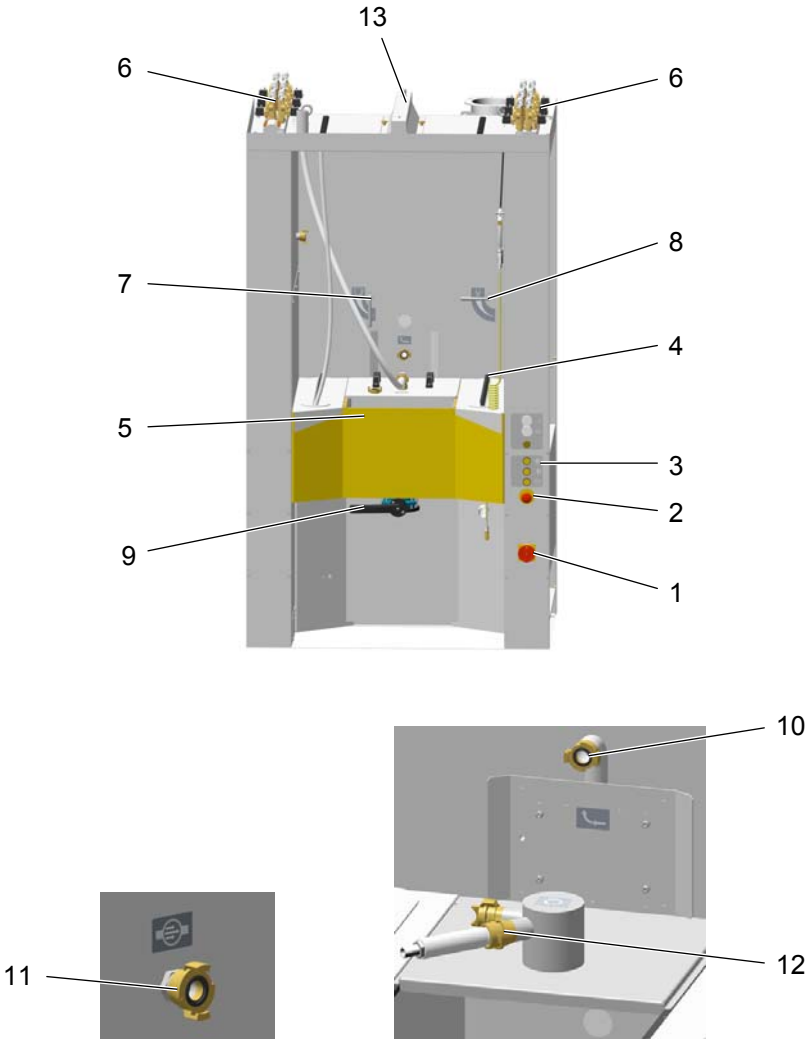

OptiCenter OC04 – layout

1	Main switch	7	Hand lever for powder container vent
2	Emergency stop push button	8	Hand lever for exhaust air
3	Illuminated push button switches	9	Hand lever for emptying of the powder container
4	Injectors	10	"Waste" connection
5	Powder container	11	Hose cleaning connection
6	Pneumatic parts	12	Recovery powder connection
		13	Lighting

Compressed air indicators

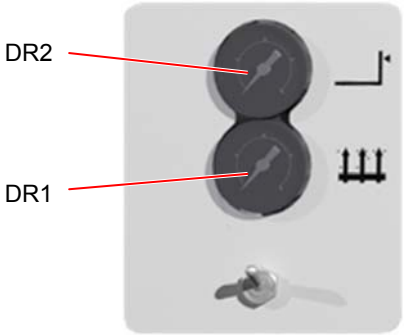

DR1	Powder container fluidizing air
DR2	Level sensor fluidizing air

Powder container

The powder container is suited for the preparation and fluidization of the coating powder.

The powder container can contain 25 kg powder (approx. 60 liters fluidized powder) and can be equipped with up to 30 OptiFlow IG06-P injectors.

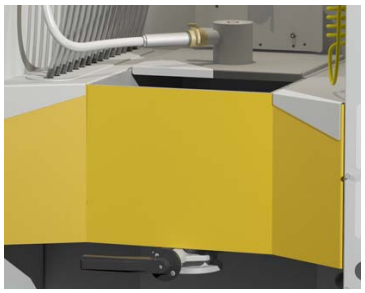

PS07 Sieve machine (option)

The PS07 sieve machine is used for the vibration supported sieving of coating powder and can be equipped with different mesh sizes (see separate operating instructions).

If necessary, the sieve machine is manually switched on and off with the relevant push button.

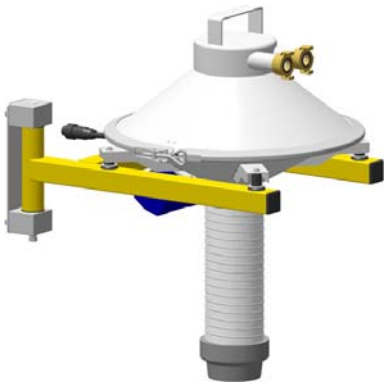

Principle of operation

Powder circuit

During the typical OptiCenter OC04 (**7**) operation the powder is filled into the powder container and fluidized. The fluidized powder is aspirated by the injectors and fed through the powder hoses to the guns/spray nozzles (**8**). The powder, which does not adhere to the workpieces, will be absorbed by the exhaust air of the booth (**1**) and separated from the air in the cyclone separator (**2**).

The separated powder is cleaned by passing it through the integrated sieve (**3**) and fed back into the OptiCenter by the dense phase conveyor (**4**), where it is prepared again for coating operation.

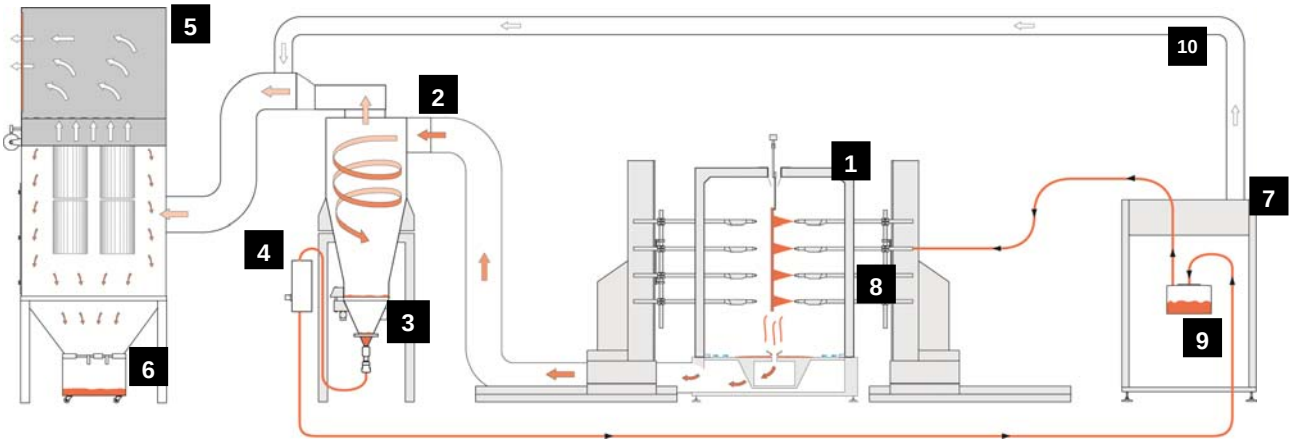

Powder flow in the plant

1	Booth	6	Refuse container
2	Cyclone separator	7	OptiCenter
3	Sieve	8	Automatic guns
4	OptiFeed PP06 Powder pump	9	Powder container
5	After Filter	10	Exhaust air ducting

Start-up

Set-up and assembly

NOTE:

Installation work to be done by the customer must be carried out according to local safety regulations!

WARNING:

The OptiCenter must only be installed in locations with an ambient temperature of between +20 and +40 °C, i.e. never next to heat sources (such as an enameling furnace) or electromagnetic sources (such as a control cabinet).

► After unpacking and installing, the OptiCenter is to be anchored to the floor with the supplied steel bolts.

Preparation for start-up

Compressed air supply

NOTE:

The compressed air must be free of oil and water!

The OptiCenter requires a connection to a sufficient dimensioned compressed air circuit.

In order to ensure a perfect operation, a pressure of **6 bar** must be adjusted with the main pressure regulator.

Compressed air supply

Grounding of the powder management center

DANGER:

The OptiCenter must be grounded according to the general, local safety regulations.

► The grounding of the powder management center must be checked regularly.

A corresponding connection point at the OptiCenter is reserved for the potential equalization.

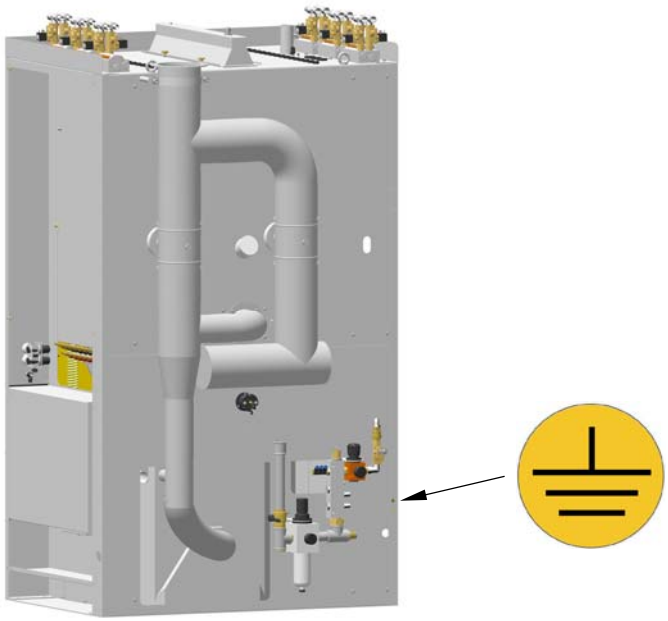

Potential equalization – connection point

Operation

Push button switches

The operation and monitoring of the OptiCenter system takes place by the illuminated push button switches.

WARNING:

The user initiated functions are not monitored electronically. Incorrect operation can lead to personal injuries or damage to the OptiCenter itself.

► The user must be fully aware of all the process steps.

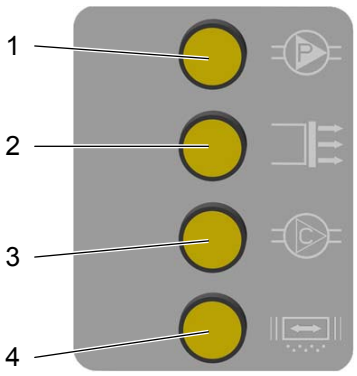

Push button switches

Push button functions

1 Powder pump ON/OFF (RP)

- Turns the powder pump ON/OFF (RP=recovery powder)
- The light indicates, that the pump is in operation
- During the cleaning process this push button switch must be OFF, so that the RP hose cleaning can be activated

2 Powder hose cleaning

– Cleaning of the powder hoses to the guns (in blocks of 6 injectors)

3 RP Powder hose cleaning

- **OFF** No illumination - Can only be activated when push button switch 1 is OFF
- **flashes** Blinking - Requiring confirmation that the RP hose is in the cleaning position (not recovery or spray to waste position)
- **ON** Steady illumination - RP hose is cleaned (by purging intermittently)

4 Sieve machine

– Turns the sieve machine ON/OFF

– The light indicates, that the Powder sieve machine is in operation

Operating modes

General information

The following operating modes are available:

- **Different coating modes:**


- **Cleaning/color change**

The operating modes are explicitly described in the following chapters.

The operating modes are selected manually by connecting the recovery hose to the corresponding connection.

Coating without powder recovery (spray to waste)

There is no powder recovery in this coating mode - the powder, which does not adhere to the object, is fed directly to the waste.

Utilization of this operating mode:

- When restarting the plant or after the color change (a few minutes)
- If highest coating quality is required
- If the volume of order is very small

Coating with powder recovery

This coating mode allows the coating with recovery of the powder, which does not adhere to the object.

Utilization of this operating mode:

- Long time coating operation with the same powder and high coating quality with minimal powder loss
- Immediate coating following a powder change with not so high demands on quality and the smallest possible of powder loss

Cleaning / color change (clean)

This operating mode enables the user to clean the OptiCenter. The higher the requirement for cleanliness, the higher the time expenditure will be.

The cleaning mode consists of two parts, the coarse cleaning and the fine cleaning. During the coarse cleaning mode the powder can be recovered, but not during the fine cleaning mode (powder loss).

The cleaning of the components is partially automated, however, some of them must be cleaned manually.

The **Cleaning** operating mode can only be initiated when the plant cleaning mode is stopped, namely by pressing the corresponding push button.

Utilization of this operating mode:

- After switching on the equipment, if very high quality is required on initial coating application
- Before every color change
- Before switching off the plant

Coating operation

Before switching on

Before switching on the OptiCenter, the following points must be observed:

- Observe the safety regulations
- Check the grounding of the OptiCenter, the booth and the other plant units and ensure it, if necessary
- Check the compressed air supply

Starting up the OptiCenter OC04

Start-up

The start-up takes place according the following steps:

1. Switch on the booth (see also the booth operating instructions)
2. Switch the powder management center with the main switch  :
   - the interior lighting switches on
3. Select desired coating mode on the OptiCenter (**Coating with** or **without powder recovery**)
   - Connect the recovery hose manually:

      = Coating with powder recovery (spray)

      = Coating without powder recovery (spray to waste)
4. Switch on the powder container fluidizing air with toggle valve

   
5. Fill with maximum 25 kg powder (approx. 60 liters fluidized powder) or the powder level must reach to a maximum of 5 cm below the ex-

haust air edge of the powder container; otherwise too much powder can be sucked to the waste.

6. Set the powder container fluidizing air  with the corresponding pressure regulator 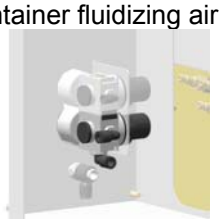
   - The powder fluidization depends on the powder type, the air humidity and the ambient temperature.
   - The powder must lightly "boil"

WARNING:

If the fluidization has been incorrectly adjusted, then the coating powder can create a dust cloud capable of causing respiratory problems.

► Adjust the fluidization correctly

7. Set the powder container aeration with the hand lever 
   - Turn the hand lever to the stop, so that the dust cloud is drawn slightly backwards
   - The stop can be set on the OptiCenter rear side
8. Set the level sensor fluidizing air  with the corresponding pressure regulator 
   - The powder fluidization depends on the powder type, the air humidity and the ambient temperature.
9. Turn on the recovery powder pump, if necessary 
10. Select desired operating mode (**AUTOMATIC** or **MANUAL**) on the booth control unit (see therefore the corresponding operating manual)
11. Start the coating procedure

Switching off the OptiCenter OC04 (after each work day)

NOTE:

Before the equipment can be turned off, the contents of the container should be emptied into a powder bag. This will prevent the powder from absorbing moisture during the night, which can cause no or uneven fluidization.

The following steps must be taken to switch off the powder center:

1. Check if all the workpieces have been coated
2. Clean the OptiCenter thoroughly, in order to avoid powder accumulation (see therefore in chapter "Cleaning / Color change")

WARNING:

Empty powder container!

3. Switch off the powder management center at the main switch
   - The interior lighting is no longer lit

Cleaning / color change

WARNING:

If no dust mask or one of an insufficient filter class is worn when cleaning the OptiCenter, then the dust that is stirred up from the coating powder can cause respiratory problems.

► The ventilation system must be turned on for all cleaning work.

► A dust mask corresponding to filter class FFP2 or N95 at minimum must be worn during any cleaning work.

WARNING:

Peak noise levels (for a short time up to 95 db(A)) occurring during the cleaning process may cause hearing damage!

► Do not approach the OptiCenter unless absolutely necessary!

► Wear adequate hearing protectors (e.g. ear muffs per EN 352-1)!

WARNING:

If no safety glasses are worn when cleaning the OptiCenter, then the dust that is stirred up from the coating powder can cause eye irritations.

► Safety glasses must be worn during any cleaning work!

NOTE:

A great deal of air is required for the cleaning procedure!

► Make sure that 6 bar is always available!

Cleaning operating mode

Cleaning procedure

Plant control (e.g. Magic Control CM30)

1. End the coating procedure
2. Select the cleaning mode.

3. Close the booth doors
4. Clean the guns externally
5. Adjust the movement axes to the cleaning position, so that the guns can be cleaned from the inside.

OptiCenter

6. Open fully the exhaust air with hand lever 
7. Empty the powder container:
   - Place the powder packaging (box or similar) under the powder container
   - Press the hand lever parts together and turn it 90° counterclockwise.
     The powder in the powder container empties into the packaging.
8. Press the  push button, in order to switch off the recovery powder pump
   - the push button lamp goes out
9. Select the powder recovery mode (**with** or **without powder recovery**)
   - Connect the recovery hose manually:

      = Coating with powder recovery (spray)

      = Coating without powder recovery (spray to waste)
10. Press the  push button, in order to switch on the recovery powder pump
    - the push button lamp illuminates
11. Press the  push button, in order to clean the powder hoses to the guns
12. Basic booth cleaning can be started now already: Activate the corresponding command on the Magic Control CM30/22
13. Switch off the powder container fluidization
14. Press the  push button, in order to switch off the recovery powder pump
15. Use a squeegee to empty the powder container completely
16. Turn the hand lever back, closing the emptying valve and remove the powder packaging
    - the push button lamp goes out
17. Open fully the powder container aeration with hand lever 
18. Continue with fine cleaning of the powder container, OptiCenter and booth with compressed air

19. Connect the recovery hose to the cleaning connection  and make sure that the hose is firmly fitted

WARNING:

Large volumes of compressed air can stream out from the connection without any control.

► This hose must be CONNECTED BY ALL MEANS!

20. Press the  push button
    - the push button lamp blinks
    - the user MUST be sure, that the recovery hose is connected to the cleaning connection
21. Press the  push button again
    - the push button lamp illuminates
    - The powder hose is cleaned, the powder is gently purged backwards to the cyclone
    - The process is completed after a certain period of time
22. Close the exhaust air  and the powder container aeration  with corresponding hand levers

NOTE:

Any individual step can be repeated as needed by pressing the corresponding key again. Otherwise, the next cleaning step can be activated.

23. Open the monocyclone 

WARNING:

The sieve can be damaged when forceful purging through the recovery hose is started.

► The sieve must be swung out completely during the cleaning process!

24. Slowly swing out the sieve and clean it with the compressed air gun

25. Press the  push button
    - the push button lamp blinks
26. Press the 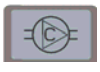 push button again
    - the push button lamp illuminates
    - The hose is blown through from the OC05 with strong pulses, the powder is gently purged backwards to the cyclone
    - The process is completed after a certain period of time

NOTE:

The procedure can be stopped or resumed manually by the user.

27. Swing the funnel on the cyclone slowly away and, at the same time, clean it off with the compressed air gun
28. Clean the inside of the cyclone with the cleaning wand
29. Close the sieve and funnel on the cyclone again

Coating after the cleaning

1. Connect the recovery hose manually to the  connection
2. Fill the powder container with powder
3. Press the  push button, in order to switch on the recovery powder pump
4. Keep the guns switched on until the first hangers have passed.
5. Press the  push button, in order to switch off the recovery powder pump
6. Connect the recovery hose manually to the  connection
7. Press the  push button, in order to switch on the recovery powder pump

Settings

WARNING:

All OptiCenter settings are set at the factory and may only be modified after consultation with a Gema service center!

Troubleshooting

General information

The causes of these errors must be eliminated, before further procedures are carried out.

Fault	Causes	Corrective action
No coating operation possible	Powder container empty	Refill powder
	Powder is not or improperly fluidized	Adjust the fluidization correctly
	Suction tube clogged	Clean, check the powder quality
	Powder accumulation on level sensor	- Clean the sensor - Readjust the sensor sensitivity - Check the fluidizing of the sensor if necessary, increase the fluidizing air pressure - Remove the fluidizing air hose and check it
	Sensor defective	Replace
	Cable defective	Replace
Powder recovery pump conveying problem Powder pump does not function properly	Pump defective	- see corresponding operating manual OptiFeed PP06
	Hose clogged	Check the recovery system
		- Check the level sensor
		- Check the cyclone funnel for powder abrasion
		- Contact a Gema service center
Powder recovery pump overpressure Powder pump is switched off	Hose clogged or connected incorrectly	Check the recovery system and/or connect correctly
	Pressure sensor at the OptiFeed PP06 Powder pump defective	replace (see also corresponding OptiFeed PP06 operating manual)
Lighting does not switch on	Circuit breaker in the electrical panel is tripped	- Check the lamp - Reset the breaker (see enclosed wiring diagram) - otherwise contact a Gema service center

Fault	Causes	Corrective action
Push buttons do not respond	Control voltage circuit breaker in the electrical panel is tripped	- Check the power panel - Reset the breaker (see enclosed wiring diagram) - otherwise contact a Gema service center

Maintenance

Daily after longer working interruptions and at the end of shift

WARNING:

Before switching off the plant, the powder container must be emptied and cleaned.

Check weekly

- Check the injector nozzles and replace them, if necessary

Decommissioning, storage

Introduction

Safety rules

Suitable equipment (e.g. a crane) must be used when moving parts that are sometimes bulky and heavy.

Components being disassembled must be adequately secured before they are detached.

Requirements on personnel carrying out the work

Use only technical personnel who are trained in operating the respective equipment (e.g. a crane).

If there are any uncertainties, please contact Gema.

Storage conditions

Storage duration

If the physical conditions for metal parts and electronics are maintained, the unit can be stored indefinitely. On the other hand, the installed elastomeric components (pinch valve collars, O-ring seals, etc.) can become brittle over time and crack when put under repeated loads.

Space requirements

The space requirements correspond to the size of the OptiCenter.

The load-bearing capacity of the floor should be at least 500 kg/m².

There are no special requirements concerning distance to neighboring equipment.

Physical requirements

Storage must be inside a dry building at a temperature between +5 and +40 °C. Preferably in a cool, dry and dark space.

Do not expose to direct sunlight.

Hazard notes

There is no danger to personnel or the environment if the unit is stored properly.

Shut-down

Decommissioning

Before starting any kind of work, the OptiCenter must be disconnected from the compressed air supply.

1. Relieve pneumatic pressure on the system
2. Unplug the power cable
3. Unplug the ground cable
4. Empty the powder container (see "Cleaning")

Cleaning

The complete OptiCenter is to be cleaned according to the instructions in the operating manual.

Disassembly/attachment of transport safety devices

Fasten the powder container cover

Packing

It is recommended that the OptiCenter is placed on a dimensionally stable, adequately large palette using a forklift truck with long forks. To prevent damage to the components, collisions with other parts must be prevented.

Identification

Apply the label "Protect from dampness and moisture" on the product and the packaging.

Maintenance during storage

Maintenance schedule

No maintenance schedule is necessary.

Maintenance works

During long-term storage, periodically perform a visual check.

Return to service

Commissioning following storage

Following storage of more than 3 years, the rubber components must be checked and replaced if necessary.

Packing, transport

Introduction

This chapter describes special precautions that must be taken during internal transport of the product if:

- the customer himself must pack, transport and ship the product, such as to have renovations or service work carried out by the manufacturer

or

- the product must be shipped for disposal (recycling).

Safety rules

Suitable equipment (e.g. a crane) must be used when moving parts that are sometimes bulky and heavy.

Components being disassembled must be adequately secured before they are detached.

Requirements on personnel carrying out the work

Use only technical personnel who are trained in operating the respective equipment (e.g. a crane).

If there are any uncertainties, please contact Gema.

Packing material

A suitably stable pallet must be used.

Transport

Data concerning goods to be transported

- The space requirements correspond to the size of the components plus the packaging
- Weight see "Technical Data"
- Points of attachment, see "Mode of transportation"

Mode of transportation

For short distances/shifts of position within the same room, parts for the booth must be transported using a forklift truck with long forks or a crane. Therefore, the steel bolts must be loosened first.

- Transport using a crane: use the eye bolts on the roof
- Transport using a forklift: remove the lateral panels before the transport

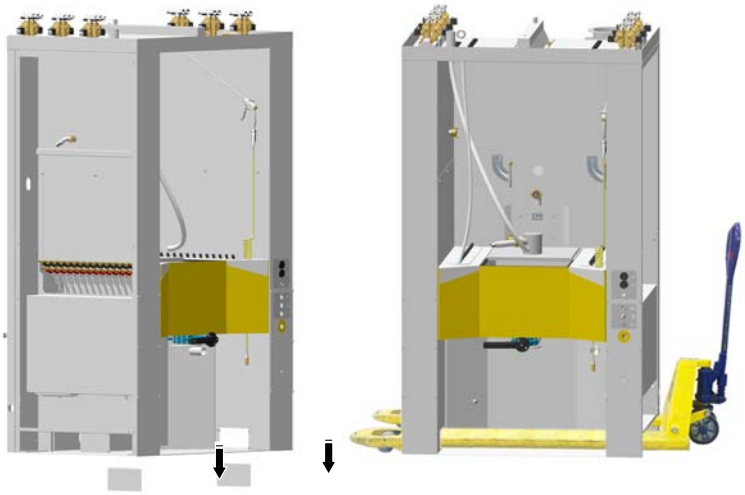

NOTE:

Transport the unit only in the position according to its intended use.

Loading, transferring the load, unloading

Suitable lifting equipment is to be used for all procedures.

Spare parts list

Ordering spare parts

When ordering spare parts for powder coating equipment, please indicate the following specifications:

- Type and serial number of your powder coating equipment
- Order number, quantity and description of each spare part

Example:

- **Type** OptiCenter OC04 **Serial number** 1234 5678
- **Order no.** 203 386, 1 piece, Clamp – Ø 18/15 mm

When ordering cable or hose material, the required length must also be given. The spare part numbers of this bulk stock is always marked with an *.

Wearing parts are always marked with a #.

All dimensions of plastic hoses are specified with the external and internal diameter:

Example:

Ø 8/6 mm, 8 mm outside diameter (o/d) / 6 mm inside diameter (i/d)

ATTENTION!

Only original Gema spare parts should be used, because the explosion protection will also be preserved that way. The use of spare parts from other manufacturers will invalidate the Gema guarantee conditions!

OptiCenter

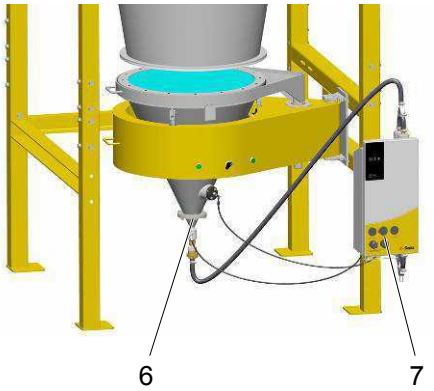

1	Electrical parts – see enclosed wiring diagram
2	Powder container – see corresponding spare parts list
3	Powder container pneumatics – see corresponding spare parts list
4	Pneumatics – see corresponding spare parts list
5	Roof – see corresponding spare parts list
6	Powder transport – see corresponding spare parts list
7	OptiFeed PP06 Powder pump – see corresponding operating manual

NOTE:

For all other electric components, see also the Spare parts list in the enclosed wiring diagram!

Powder container – complete

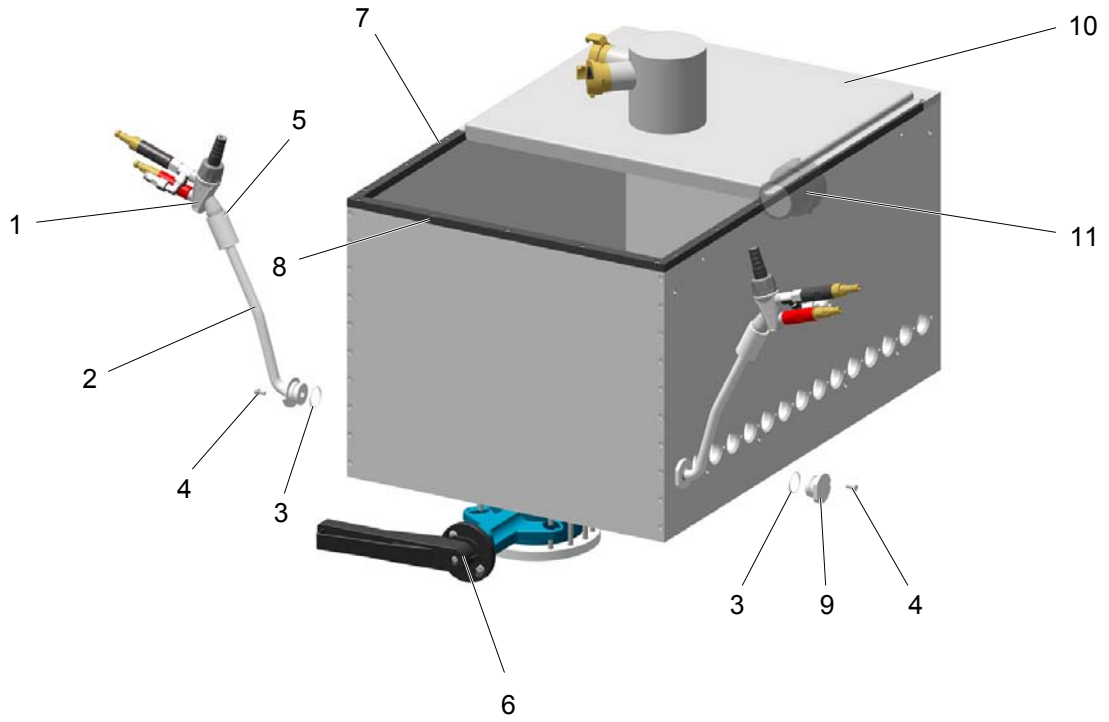

1	OptiFlow IG06-P injector – see corresponding operating manual	1007 779
2	Suction tube – complete, incl. pos. 3	1011 879
3	O-ring – Ø 22x1.5 mm	231 614#
4	Screw – M4x8 mm	216 259
5	Grub screw – M5x8 mm	214 825
6	Butterfly valve – DN32 G 1 1/4", complete	1011 293
7	Cover strip – long	1011 745
8	Cover strip – short	1011 998
9	Plug cap	1012 026
10	Container cover – complete	1012 015
11	Level sensor – see corresponding spare parts list	

#Wearing part

Powder container – Fluidizing plate

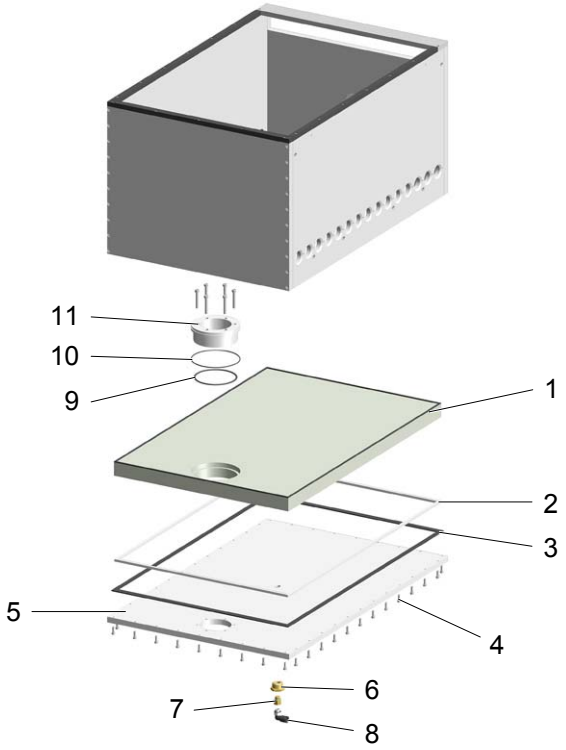

	Bottom fluidizing plate 30P – set (incl. pos. 1, 4, 9, 10)	on request
1	Bottom fluidizing plate 30P – complete	1011 832#
2	Spacing frame	1011 895
3	Gasket 30P	1011 896
4	Allen cylinder screw – M4x12 mm	
5	Fastening plate	1011 742
6	Adapter nipple – 1/4"-1/2"	253 995
7	Flow restrictor – Ø 2.5 mm, complete	652 113
8	Elbow joint – 1/8"-Ø 8 mm	251 372
9	O-ring – Ø 80x2.5 mm	#
10	O-ring – Ø 95x2 mm	#
11	Connector	1011 833#

#Wearing part

Powder container – Level sensor

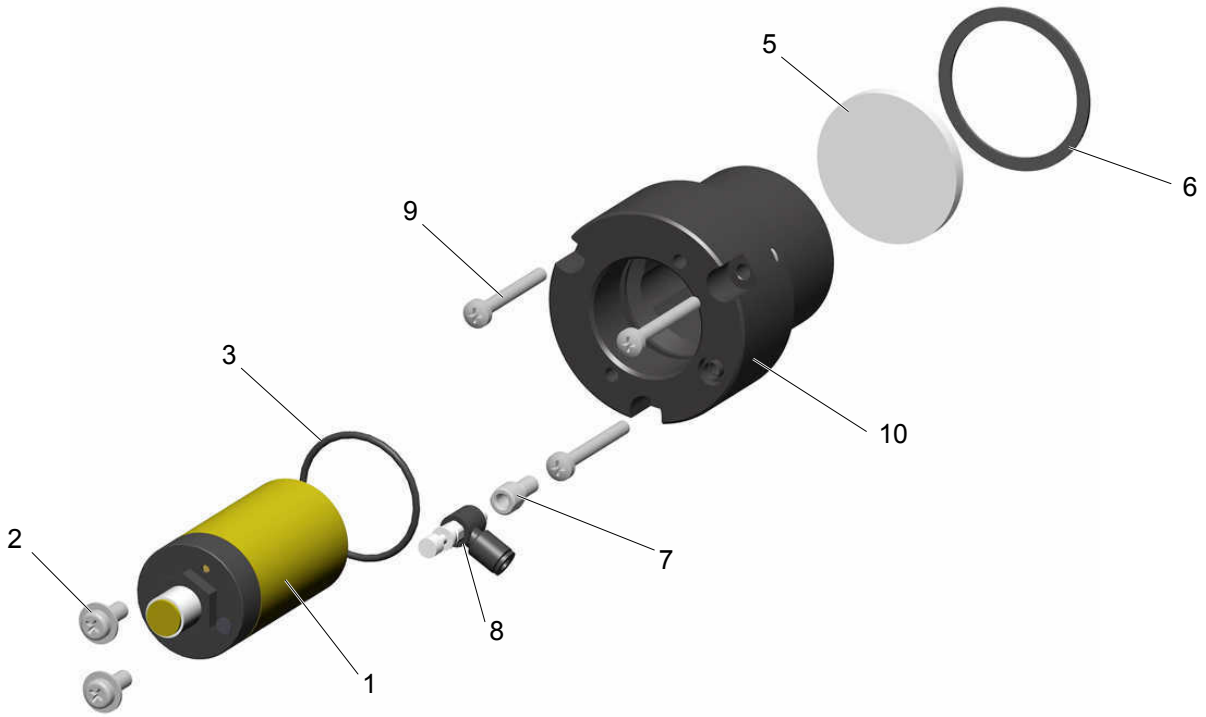

	Level sensor set (incl. pos. 1, 2, 3)	720 003
1	Level sensor – N.O., 10...65 VDC	1002 436
2	Cap screw – M5x12 mm	239 941
3	O-ring – Ø 34x2 mm	1003 151
4	Cable – for pos. 1 (not shown)	1005 498
	Fluidizing plate set (incl. pos. 5, 6, 7, 8, 9)	720 004
5	Fluidizing plate – Ø 44x4 mm	1005 646#
6	Gasket – Ø 47.5x1 mm	1007 639#
7	Compressed air connector	1005 544
8	Throttle valve – Ø 4-M5x0.8 mm	1005 634
9	Cap screw – M4x35 mm	237 965
10	Support	1005 644

#Wearing part

OptiCenter – Pneumatics

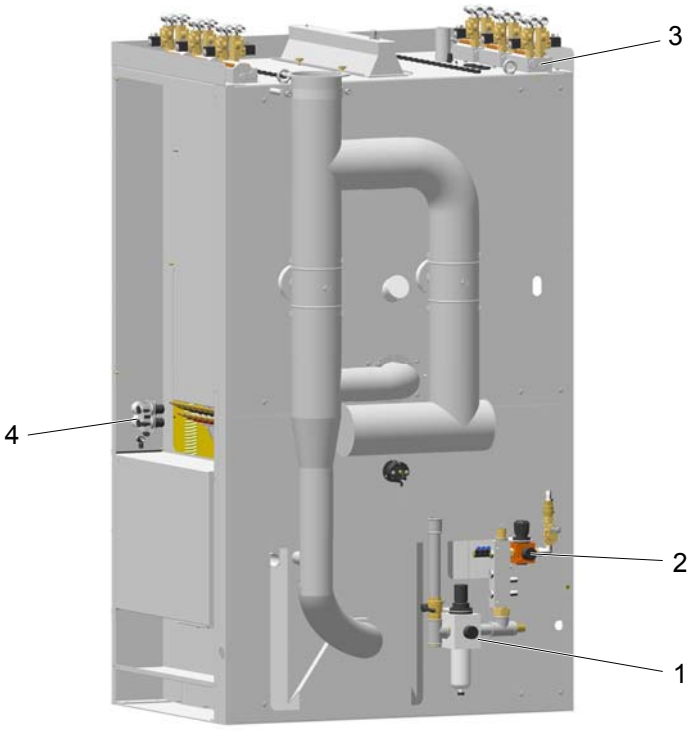

1	Main air supply – see corresponding spare parts list	
2	Manifold – see corresponding spare parts list	
3	Shuttle valves pool – see corresponding spare parts list	
4	Powder container pneumatics – see corresponding spare parts list	
3	Powder hose – dia. 16/23 mm	1010 040*#
5	Compressed air hose – Ø 16.4/26.6 mm	105 155*

#Wearing part

***** Please indicate length

Main air supply

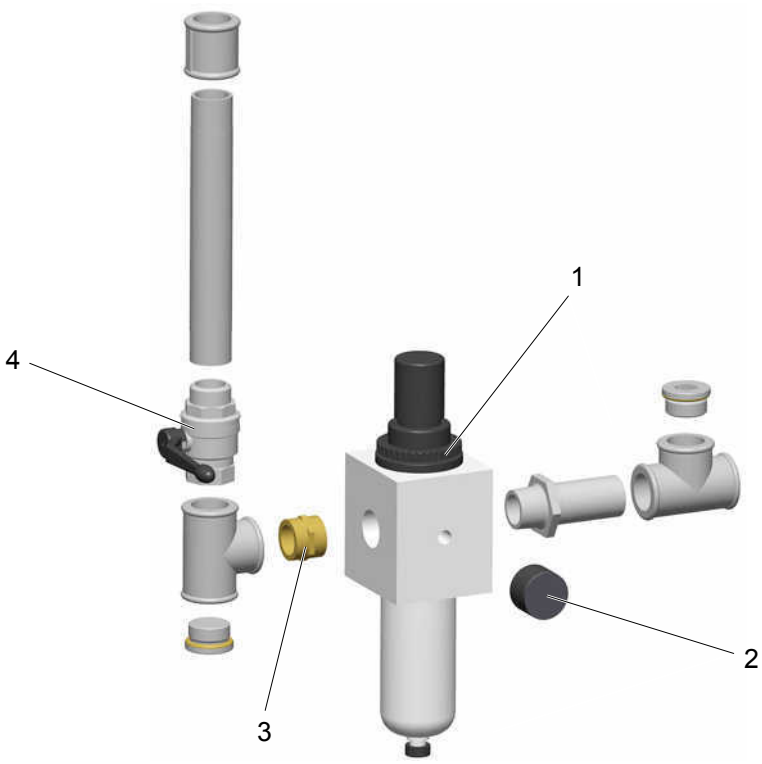

1	Pressure regulator/Filter unit – 0.5-8 bar, 1"	1006 547
2	Pressure gauge – 0-10 bar, 1/4"	1010 964
3	Double nipple – 1"-1"	1003 544
4	Ball valve – 1"-1"	1006 065

Powder container – Pneumatic manifold

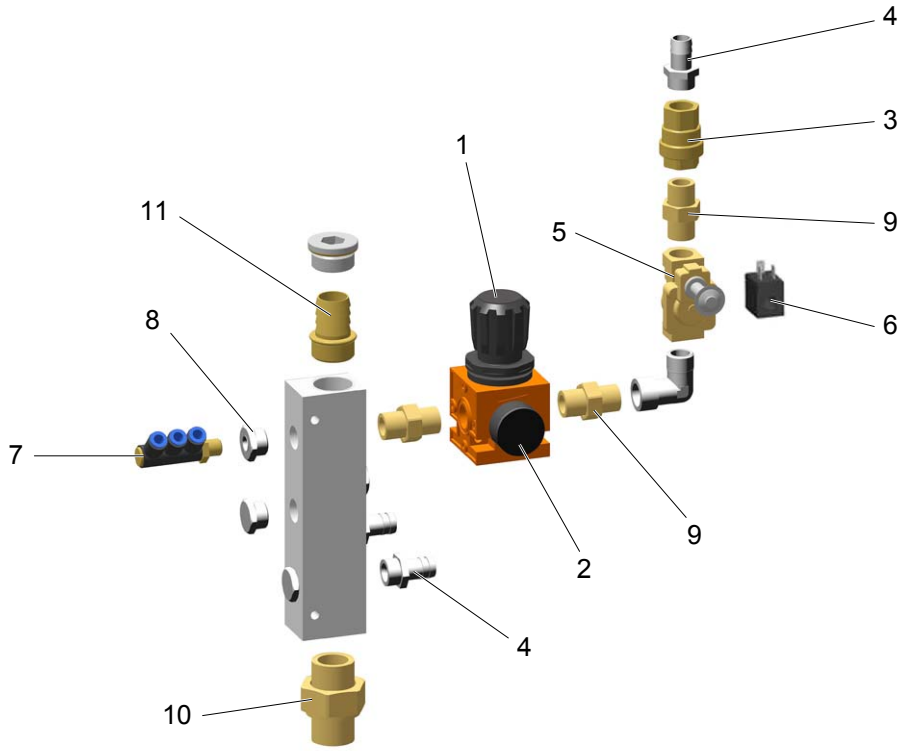

1	Pressure regulator – 0-8 bar, 1/2"	1007 168
2	Pressure gauge – 0-10 bar, 1/8"	259 179
3	Check valve – 1/2"-1/2"	259 160
4	Hose connector – Ø 17-1/2"	223 069
5	Solenoid valve – 1/2", NW13.5 mm, without coil	1005 120
6	Valve coil – 24 VDC	1005 119#
7	Elbow joint – 1/4"-Ø 8/3 x 1 mm	1002 614
8	Adapter nipple – 1/4"-1/2"	253 995
9	Double nipple – 1/2"-1/2", divisible	243 582
10	Double nipple – 1"-1", divisible	1005 563
11	Hose connector – Ø 25 mm-1"	1005 856

#Wearing part

Shuttle valves pool

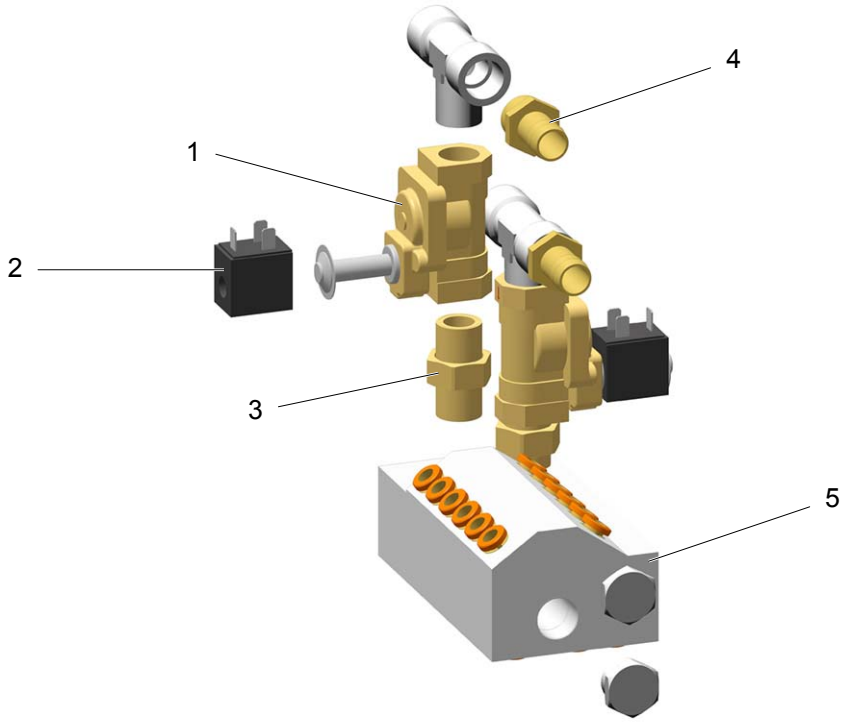

1	Solenoid valve – 1/2", NW13.5 mm, without coil	1005 120
2	Valve coil – 24 VDC	1005 119#
3	Double nipple – 1/2"-1/2", divisible	243 582
4	Hose connector – Ø 17 mm-1/2"	223 069
5	Block	1007 388

#Wearing part

Powder container pneumatics

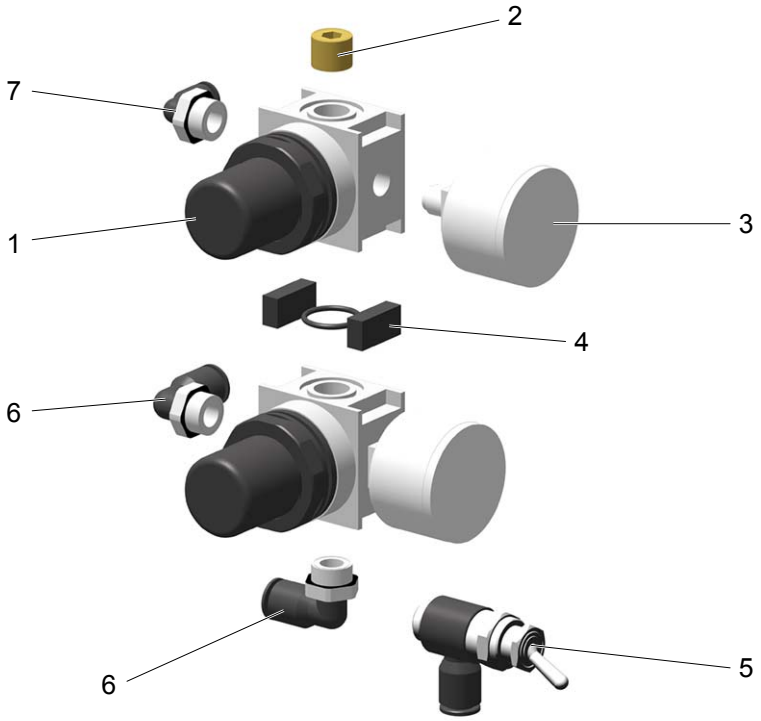

1	Pressure regulator – 0.5-6 bar, 1/4"	264 342
2	Sealing plug – 1/4"	258 695
3	Pressure gauge – 0-10 bar, 1/8"	259 179
4	Coupling package	264 350
5	Toggle valve	1012 283
6	Elbow joint – 1/4"-Ø 8 mm	254 029
7	Elbow joint – 1/4"-Ø 6 mm	265 691

Monocyclone – Powder transport

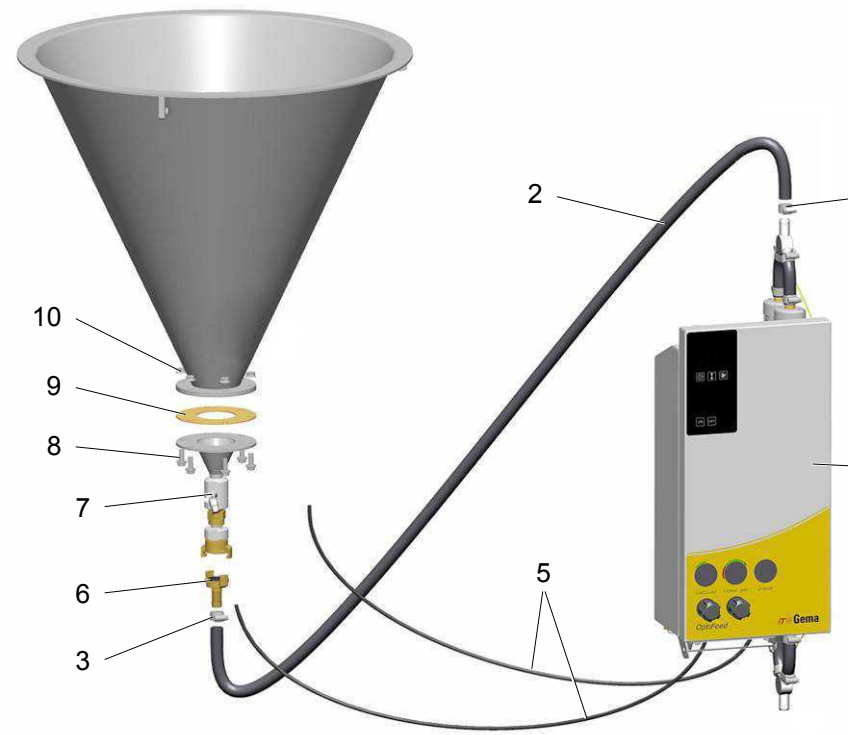

2	Powder hose – dia. 16/23 mm	1010 040#*
3	Hose clamp – 17-25 mm	223 085
4	OptiFeed PP06 Powder pump – see corresponding operating manual	
5	Plastic tube – Ø 6/4 mm	103 144*
6	GEKA coupling with grommet – Ø 16 mm	1003 872
7	Fluidizing unit – complete, see corresponding spare parts list	1005 507#
8	Allen cylinder screw – M8x20 mm	265 241
9	Gasket	395 439#
10	Hexagon shakeproof nut – M8	244 449

#Wearing part

Monocyclone – Powder transport connection

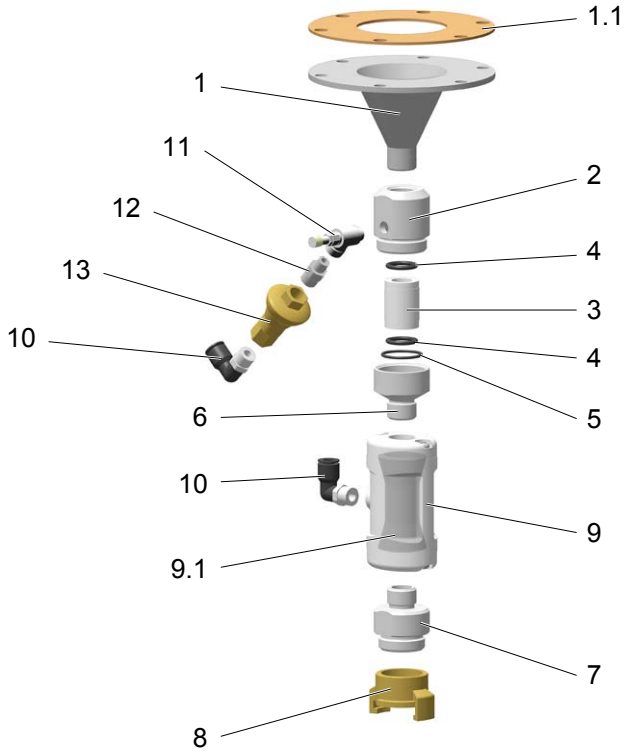

	Powder transport connection – complete (pos. 1-13, incl. fixing screws)	1008 846
1	Funnel piece	1005 502
1.1	Gasket for pos. 1	395 439#
	Fluidizing unit – complete (pos. 2-6)	1005 507
2	Connector	1005 504
	Fluidizing tube set (incl. pos. 3, 4, 5)	720 006
3	Fluidizing tube	1005 505#
4	O-ring – Ø 17x3 mm	242 489#
5	O-ring – Ø 26x2 mm	246 549#
6	Locking piece	1005 506
7	Connecting piece	1005 503
8	GEKA coupling – 1"-IG	1000 854
9	Pinch valve NW15 – complete, incl. pos. 9.1	1006 255
9.1	Pinch valve sleeve NW15	1006 256#
10	Elbow joint – 1/4"-Ø 8 mm	224 359
11	Throttle valve – 1/8"-1/8"	1002 127
12	Double nipple – 1/4"-1/8"	242 209
13	Inline regulator – 3 bar, 1/4"	1005 517

#Wearing part