E

Operating Instructions and Spare Parts List

FPS 1-V / FPS 2-V Fresh powder supply

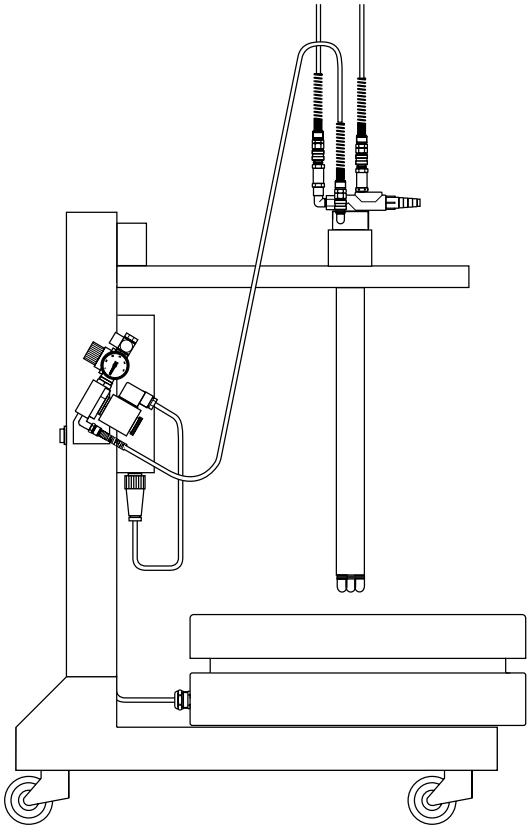

ITW Gema

Issued 07/00

Table of Contents

Issued 07/00

About these operating instructions

These operating instructions contain important information which is required to operate the FPS Fresh Powder System. It will guide you safely through the assembly phase, give you information to convert an FPS 1 to FPS 2 and give instructions and tips for optimizing the new powder coating system. The information about functioning of the individual system components – PGC 1 Powder Gun Control, PG Manual or Automatic Powder Gun or PI Injector – are found in the accompanying documentation.

Issued 07/00

Fresh powder supply FPS 1-V / FPS 2-V

1. Fields of application

The FPS 1-V / FPS 2-V fresh powder supply is especially suited for supplying the powder for 1 or 2 guns from the powder manufacturer's container through the fluidizing/suction tube unit.

2. Scope of delivery for FPS 1-V (standard): Order no. 339 962

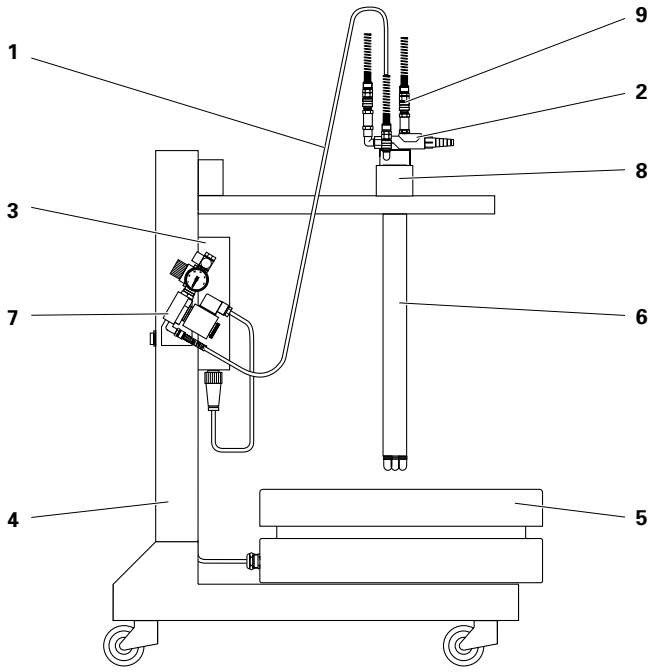

Figure 1

A transport trolley (**4**).

A vibrating table (**5**) for container up to 420 x 420 x 470 mm capacity (w x d x h)

A vibrating table control unit (**3**), available as 100, 110, 120, 200, 220 or 240V version

A powder fluidizing/suction tube unit (**6**). with sleeve (**6.1**) and lock ring.

A fluid/pneumatic unit (**7**)

A PI plug-in injector (**2**).

A connecting hose (**1**) for fluidizing air.

Two quick-release connections (**9**) for the PI injector

1	Connecting hose	5	Vibrating table
2	PI injector	6	Powder fluidizing/suction tube unit
3	Vibrating table control unit	7	Fluid/Pneumatic unit
4	Transport trolley	8	Sleeve
		9	Quick-release connection

3. Supplementary material for FPS 2-V (standard) Order no. 339 970

- A PI plug-in injector (**2**)
- Two quick-release connections (**9**) for the PI injector.
- A second powder fluidizing/suction tube unit **(6)** with sleeve (**8**) and lock ring.
- A connecting hose (1) for fluidizing air.
- Two air connection rings and an air connection adapter

Issued 07/00

Functional description

The powder container is placed directly onto the vibrating table and the powder is agitated by the vibration motor mounted under the table.
The powder is fluidized by compressed air being fed down the outer chamber of the fluidizing/ suction unit, see Figure below, and out through the fluidizing pads at the bottom of the tube. Powder surrounding the fluidizing/suction unit is fluidized and obtains a liquid-like property before being sucked up into the opening at the base of the tube. Fluidizing air is fed into the fluidizing tube from a fluidizing unit connector fitted on the column. The agitated powder surrounding the tube tends to sink to the bottom of the container where it is sucked into the opening at the base of the tube by the vacuum created by conveying air (red hose) passing through the injector. The powder/air mixture reaches the gun through the powder hose fitted to the outlet side of the injector.
Vibration causes the powder in the container to precipitate evenly, preventing powder from collecting in the corners of the container. Because of this, practically all the powder in the container can be used (optimum powder exploitation).
The conveying air and the supplementary air are regulated on the control module.
The arrows in Figure below show the direction of flow of the powder, and air.

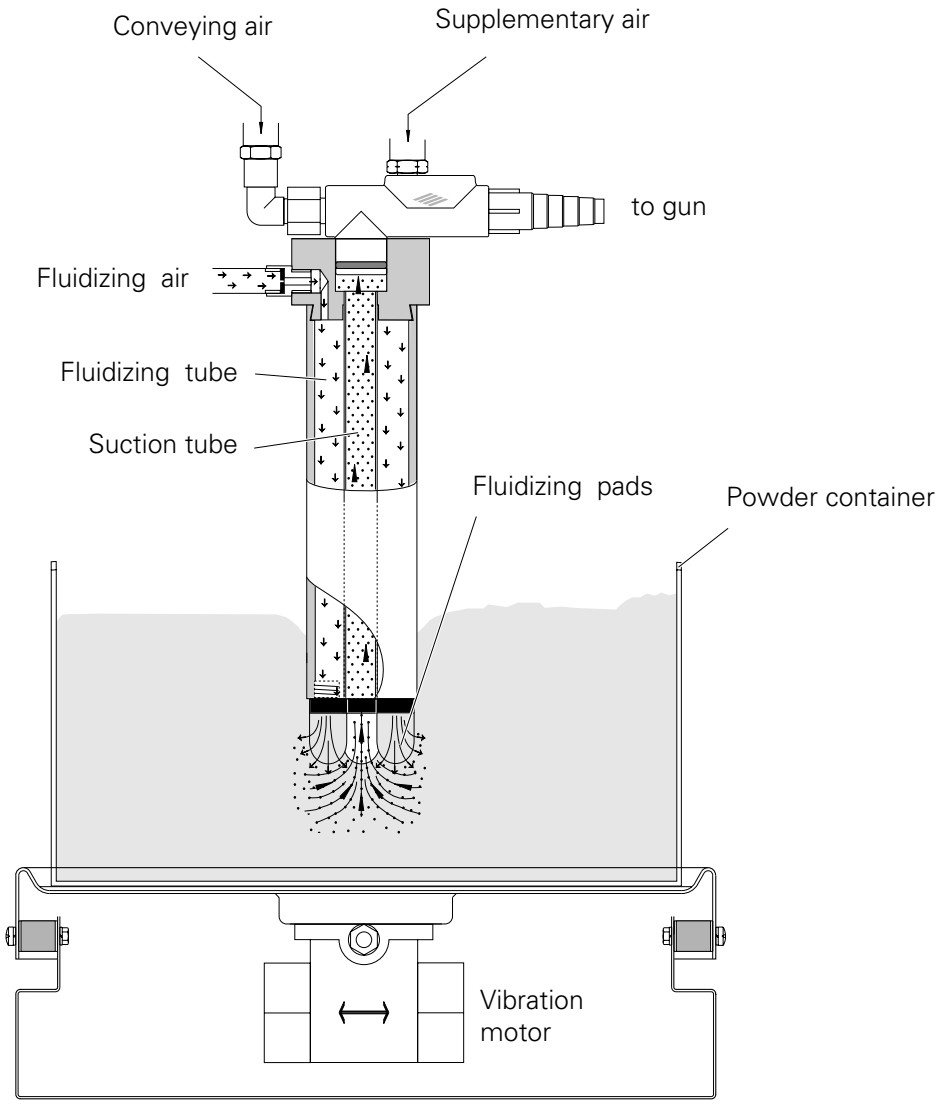

Figure 2

Issued 07/00

Preparatory steps for initial start-up

The powder coating system is preassembled in the factory so that it is only necessary to connect Mains cable for the vibrating table and hoses to the injector(s), and to the fluidizing/ suction tube. Refer to the figure 1.

1. Connect the red hose to the conveying air outlet at the rear of the control module and the other end to the quick-release connection of the conveying air hose input of the injector.
2. Connect the black hose for the supplementary air to the corresponding outlet of the control module and to the quick-release fitting of the injector.
3. Connect the green hose for the fluidizing air to the corresponding outlet of the fluid/ pneumatic unit on the column and to the quick-release fitting of the fluidizing/suction tube.
4. Establishing the ground connection.

   Connect the ground connection cable clip on the column of the trolley to the booth or the work piece suspension device.
5. Connect the Mains

Start-up

The powder output is dependent on the type of powder, relative humidity, ambiente temperature, the powder hose length and the number of coils, the powder hose diameter, the conveying air pressure, and the supplementary air. The operating principle of the injector and the influence of the supplementary air are explained in the corresponding Operation Instructions supplied.

1. Lift the fluidizing/suction tube and swing the carrier arm to the side.
2. Place a open powder container onto the vibrating table.
3. Swing the carrier arm over the container and replace the fluidizing/suction tube unit in the support and let the fluidizing/suction tube sink into the powder until it rests on the support.
4. Switch the vibration table on .
5. Switch the control module on.
6. Set the conveying air (Refer to the Gun Operating Instructions)
7. Adjust the supplementary air (Refer to the Gun Operating Instructions)

Issued 07/00

Colour change

1. Clean the fluidizing/suction tube, see "Cleaning"
2. Blow out the powder hose with compressed air.
   The powder hose is easy to clean with a piece of foam rubber (approx ø 15 mm) which is blown through the hose under pressure.
3. Disassemble and clean the gun, refer to Gun Operating Instructions .
4. Prepare control module for operation with new powder, refer to Control Module Operating Instructions.
5. Before starting with the coating operation, "flush" powder hose and gun with the new powder.

Cleaning and repairs

Fluidizing/suction tube unit

a) Cleaning

1. Remove the injector.
2. Remove the fluidizing/suction tube unit from the support and wipe with a clean, dry brush and a clean cloth.
3. Clean the injector fitting, and injector seat.
4. Reassemble the individual parts.

Trouble shooting guide

Faults	Causes	Remedies
The gun does not spray powder although the Control Module is switched on	- Injector, check valve or throttling, powder hose or gun are clogged and must be cleaned. - The insert sleeve in the injector is worn and must be replaced.	Clean the corresponding part Replace with a new insert sleeve
The powder is not vibrated	Table does not vibrate - Vibrating table control unit switched off - Vibration motor defective - Condenser or fuse defective	 Switch on Replace Replace

Issued 07/00

Wiring diagram

MHA07-A014-4

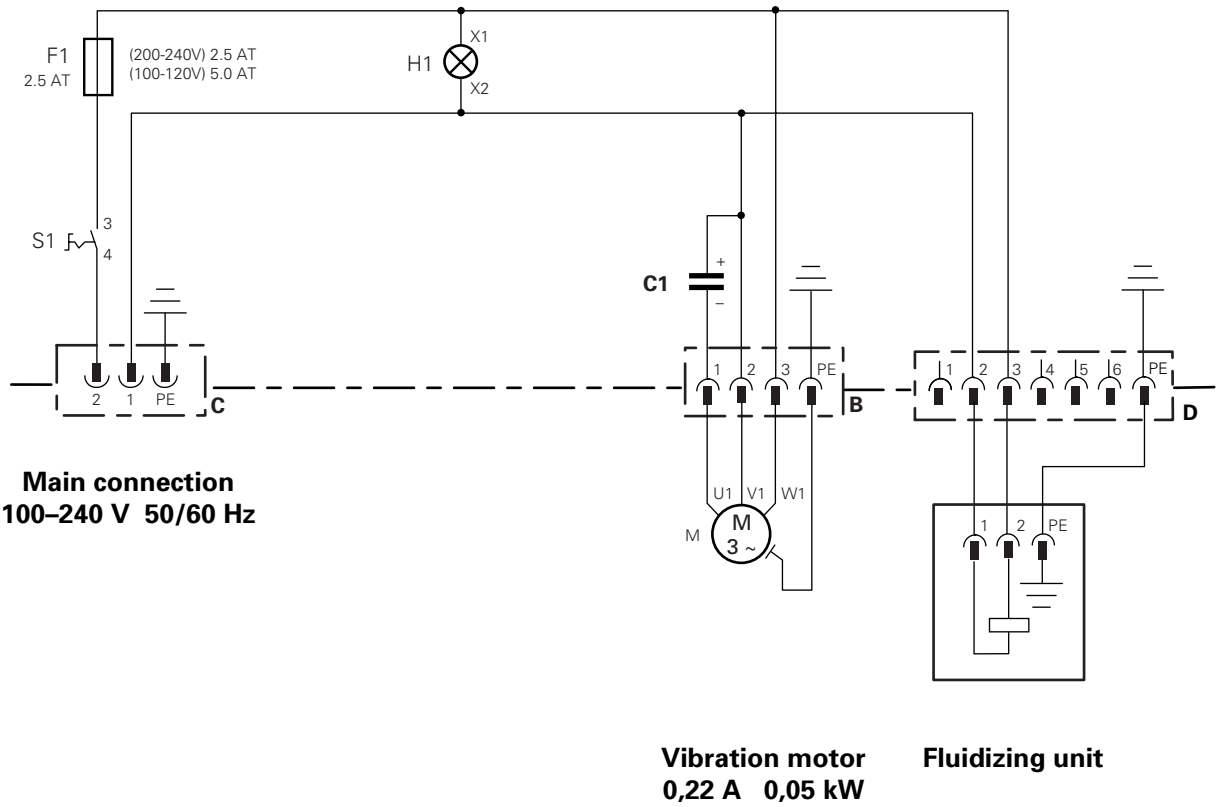

VOLTAGE	VIBRATION MOTOR	CONDENSOR
100 V	238 082	242 330
110 V	238 090	238 058
120 V	238 104	238 058
200 V	238 074	237 540
220 V	237 582	237 540
240 V	238 066	237 540

Figure 3

Issued 07/00

Spare Parts List

Ordering Spare Parts

When ordering spare parts for powder coating equipment, please indicate the following specifications:

1. Type, and serial number of your automatic powder coating equipment
2. Order number, quantity, and description of *each* spare part.

Example:
1. Type FPS 1-V, **Serial no:** xxxx xxxx

2. Order no: 201 073, 5 pieces, fine wire fuse

When ordering cable or hose material the length required must also be given.
The spare part number of yard/metre ware always begins with 1.. ... and are always marked with an ***** in the spare parts list.

Wear parts are always marked with a **#**.

All dimensions of plastic powder hoses are quoted as external (o/d), and internal (i/d) diameters:
e.g. ø 8 / 6 mm = 8 mm outside diameter (o/d) / 6 mm inside diameter (i/d).

Issued 07/00

Fluidizing/Suction unit for PI injector

	Fluidizing/Suction unit, complete (Items **8, 9, 10, 13, 14**)	362 425
8	Reduction nipple - 1/8" (male)-1/8" (female)	200 930
9	Throttle - ø 0.3 mm	338 303
10	Fluidizing pad	237 264**#**
11	Sleeve	338 052
12	Lock ring	341 142
13	Quick-release connection - 1/8"	200 859
14	Elbow joint - 1/8"-1/8"	235 733

Injector (see Spare Parts List "PI Injector" supplied)

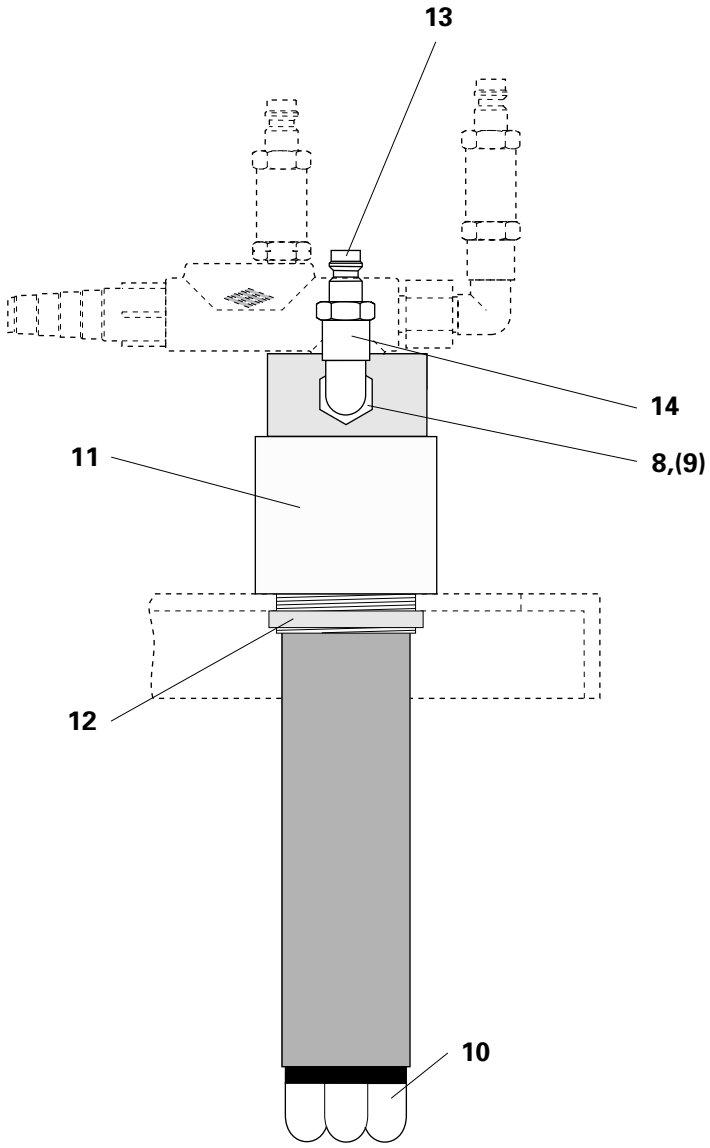

Wear parts

Figure 4

Fluidizing unit

	For FPS 1-V complete (**incl.** items 1, 1.1, 2 – 9)	362 689
	For FPS 2-V complete (**incl.** items 1, 1.1, 2 – 11, 20)	362 697
1	Solenoid valve complete - 220 V / 50 Hz	252 549
1.1	Solenoid coil - 220 V / 50 Hz	252 557
1.2	Solenoid coil - 120 V / 60 Hz	252 530
2	Pressure regulator	242 225
3	Pressure gauge - 0-6 bar	237 060
4	Elbow connection - 1/8"-ø 8 mm	242 853
5	Adapter	242 209
6	Main air connector - 1/4" - 1/4"	236 063
8	Air connection adapter	237 221
9	Gasket - ø 13.4 x 18 x 1.8 mm - Plastic	225 487
10	Air connection ring - 1/8" for FPS 2-V	252 255
11	Air connection adapter - 1/8" for FPS 2-V	252 263
12	Screw connector - 1/4"	203 106
14	Quick-release connector - 1/4"	203 106
15	Carrier plate for fluidizing unit	346 110
16	Double adaptor - 1/4 "	202 479
19	Hose - ø 8 / 6 mm - green	103 519*
20	Gasket - ø 13.4 x 10.2 x 1.0 mm	201 219
21	Quick-release connector - ø 8 / 6 mm	203 181
22	Solenoid plug with cable	362 476

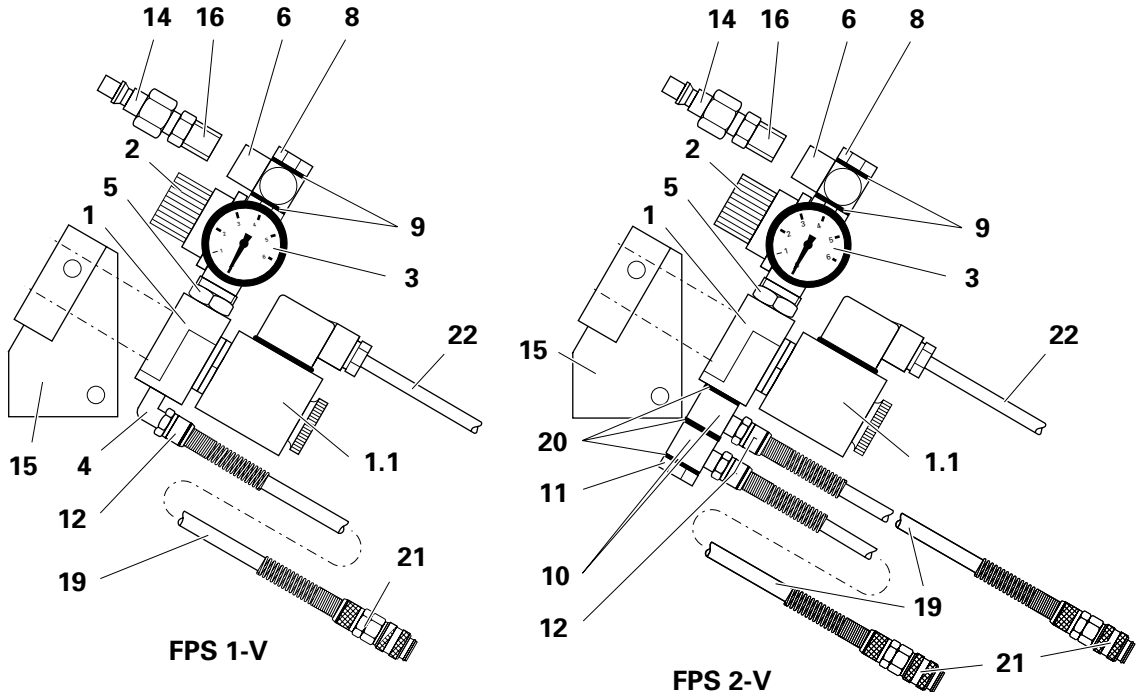

***** Indicate length required
# Wear parts

Figure 5

Vibrating table control unit

	Vibrating table control unit, complete	362 468
2	Condensor - MFD4 for 200-240 V	237 540
2.1	Condensor - MFD4 for 110-120 V	238 058
2.2	Condensor - MFD8 for 100 V	242 330
3	Flange socket - 4 pin	205 249
4	Mains connection - 3 pin, complete	200 409
5	Fuse holder	200 131
6	Fuse 2.5 AT for 200 - 240 V	206 571**#**
6.1	Fuse 5.0 AT for 100 - 120 V	200 166**#**
7	Main switch	245 402
8	Fixture adapter	235 920
9	Contact element	235 938
10	Bulb holder unit for 200 - 240 V	238 040
10.1	Bulb holder unit for 100 - 120 V	235 946
11	Bulb 130 V / 20 mA	203 688**#**
13	Connection - 7 pin, complete	200 093

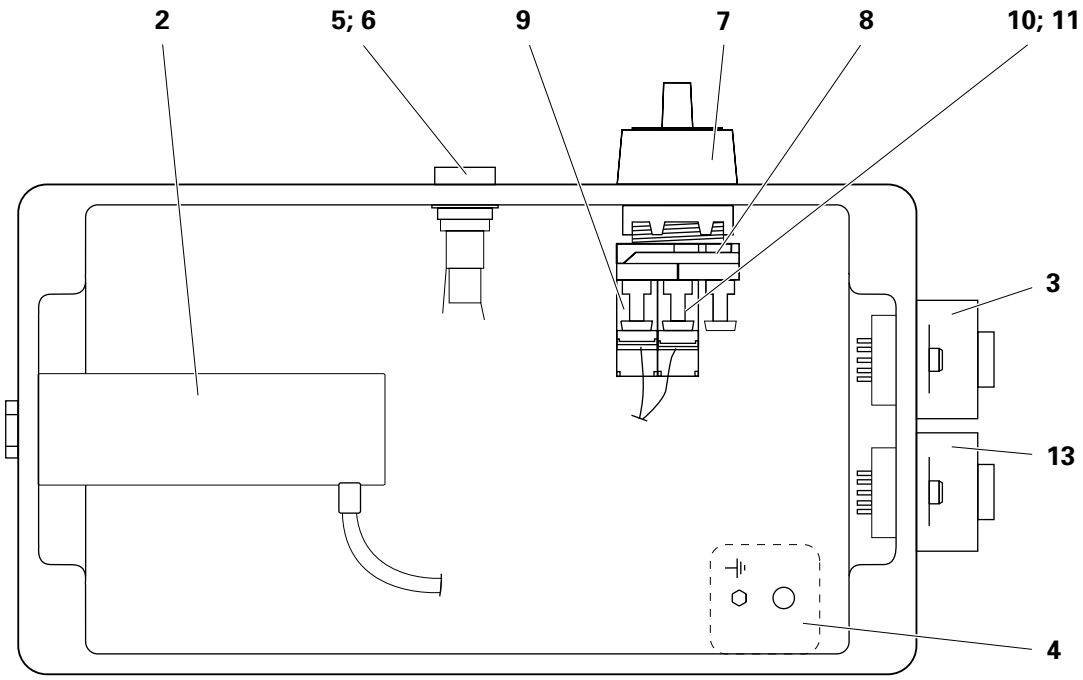

***** Indicate length required
# Wear parts

Figure 6

Vibrating table

	Vibrating table 230 V - complete	359 637
1	Vibrating table	359 610
3	Vibration motor 220 V - 240 V	237 582
3.1	Vibration motor 200 V	238 074
3.2	Vibration motor 100 V - 110 V	238 090
3.3	Vibration motor 120 V	238 104
4	Rubber buffer ø 25 mm	251 658**#**
5	Vibration motor cable and plug (item 8)	338 559
6	Lead-through	204 366
7	Cap nut - PG 16	204 412
8	Plug 4 pole	206 466
10	Hexagonal screw M 5 x 25 mm	243 809
12	Spring washer M 5	205 168
14	Cheesehead screw M 5 x 8 mm	220 868
15	Hexagonal screw M 6 x 8 mm	213 799
16	Spring washer ø 6.1 / 9.9 x 1.6 mm	235 075
20	Protecting strip	103 942***#**

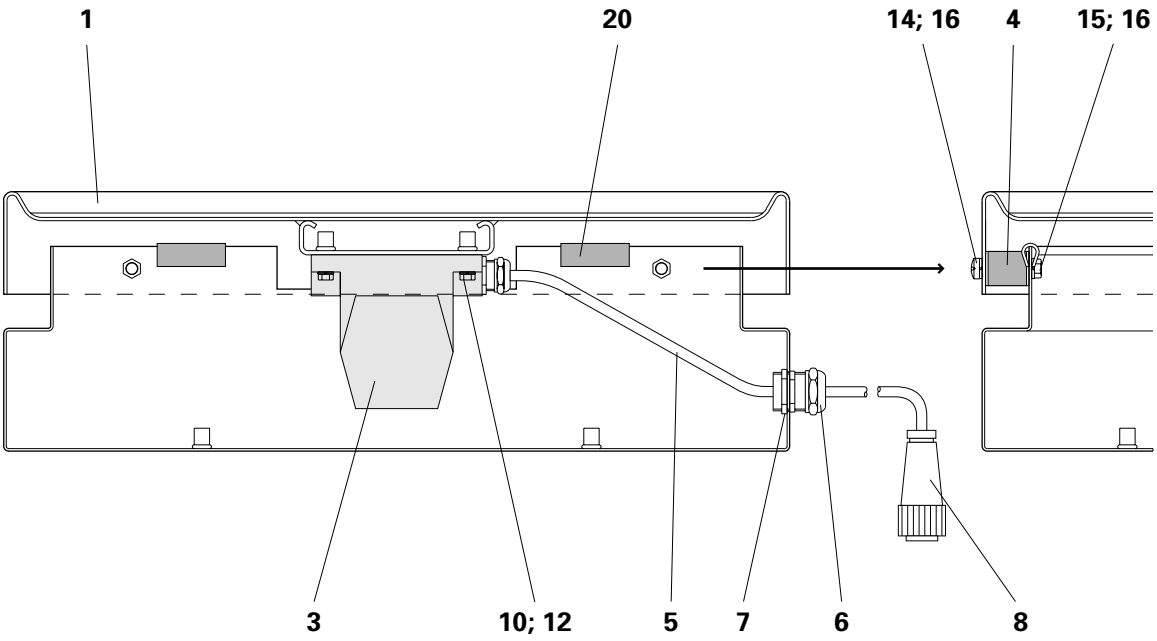

***** Indicate length required
# Wear parts

Figure 7

FPS 1-V / FPS 2-V

1	Trolley wheels	202 215

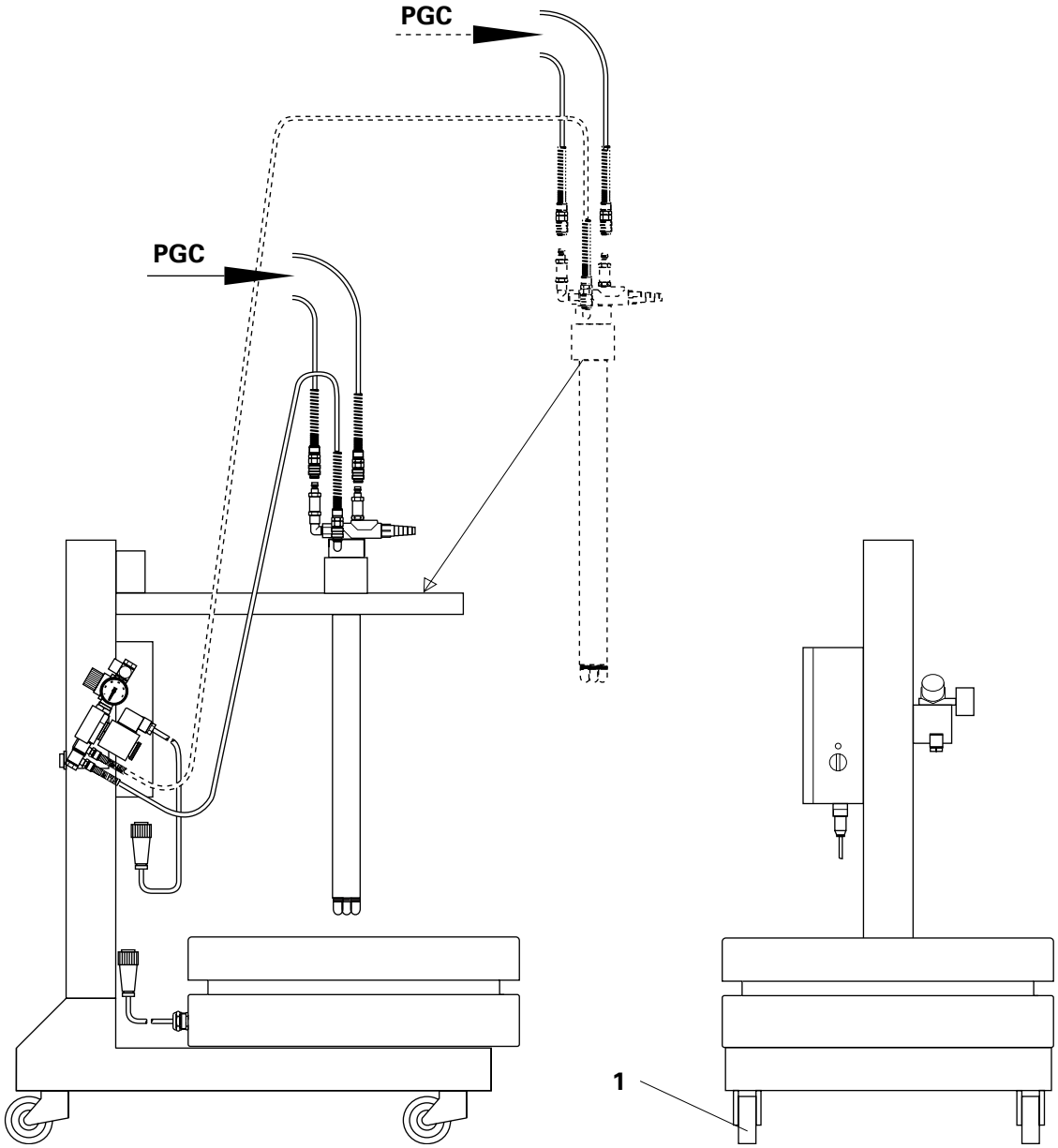

Figure 8

Issued 07/00

Notes:

Issued 07/00

Documentation FPS 1-V / FPS 2-V

Printed in Switzerland

Issued 07/00