E

Operating Instructions and Spare Parts List

MPS 1-S / MPS 2-S
Manual Powder System

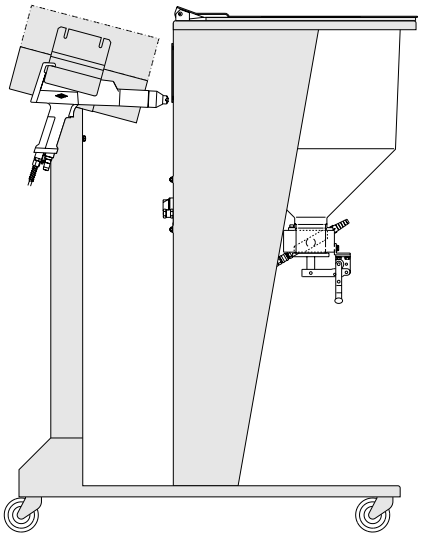

ITW Gema

Issued 01/00

Table of Contents

Directions for use

Safety rules for the electrostatic powder coating

Technical Data

About these operating instructions 1

Manual powder system for MPS 1-S / MPS 2-S electrostatic coating 2

1. Fields of application 2

2. Scope of delivery for MPS 1-S (standard): 2

2.1 Supplementary material for MPS 2-S (standard) 2

Functional description 3

Installation of the powder coating system 4

Converting MPS 1-S to MPS 2-S 5

Procedure for converting MPS 1-S to MPS 2-S 5

Procedure for converting the Main compressed air input connection. 5

Preparatory steps for initial start-up 6

a) Setting the correct line voltage 6

Setting the correct line voltage in the PGC 1 Control Module 6

Setting the correct line voltage in the Stirrer Control Unit 7

b) Connection to the compressed air supply 7

c) Establishing the ground connection 7

d) Connecting the PG 1 powder gun 8

e) Function check 9

f) Filling the powder hopper 9

Start-up 10

a) Powder stirrer 10

b) Adjusting the powder output and powder cloud 10

c) Powder coating - Start-up 11

d) Shutdown 11

e) Rinsing the powder hose 11

Colour change 12

(continued)

Table of Contents (continued)

Maintenance schedule 12
a) Daily maintenance 12
b) Weekly maintenance 12
c) If the control module remains idle for several days 12
Cleaning and repairs 13
Cleaning the Powder hopper 13
Cleaning PG 1 Powder Gun 13
Trouble shooting guide 14
Supplementary material for converting MPS 1-S to MPS 2-S 16
Pneumatic diagram for MPS 1-S 17
Wiring diagram for the MPS 1-S (CB 1 control board) 18
Wiring diagram for the MPS 1-S (CBS control board) 19
Notes 20

Spare Parts List 21
Ordering Spare Parts 21
Stirrer motor control unit 22
Stirrer powder hopper 24
External air input unit 26
MPS 1-S / MPS 2-S 27

Issued 01/00

Directions for use

The electrostatic manual coating system consists of:

PG 1 Electrostatic manual powder coating gun.
PGC 1 Control module with CB 1 electronics control board.
Powder hopper with a stirrer mechanism.

This equipment is matched and should only be operated in this configuration.

This equipment combination was tested by PTB: PTB test No 91.C.9102, Date tested 1991

Safety rules for the electrostatic powder coating

1. This equipment can be dangerous when it is not operated according to the following standards:

   EN 50 050 (or VDE 0745 Part 100),
   EN 50 053 Part 2 (or VDE 0745 Part 102).

2. All electrostatic conductive parts which are within 5 metres of the coating area and especially the work pieces must be grounded.
3. The floor in the coating area must be electrostatic conductive. Normal concrete is generally conductive.
4. The operating personnel must wear electrostatic conductive footwear, i.e. leather soles.
5. The operating personnel should hold the gun in the bare hand. If gloves are worn they must be electrostatically conductive.
6. Connect the grounding cable (green/yellow) supplied to the grounding terminal on the transport trolley column. The grounding cable must have a good metal to metal contact with the coating booth, recovery unit, and the work-piece conveyor system, especially with the work-piece suspension.
7. The electrical cables and powder feed hoses to the gun must be laid out so that they are protected from possible mechanical damage.
8. The powder coating equipment should only be switched on after the coating booth is in operation. If the booth breaks down then the powder coating system must also be switched off.
9. Check the grounding of all electrostatic conductive parts at least once a week.
10. When cleaning the gun or changing nozzles the control module must be switched off.

Technical data for the MPS 1-S and MPS 2-S electrostatic coating system

Type	***MPS 1-S***	***MPS 2-S***
Electrical data		
Single-phase AC		
Selectable voltage :	100 V, 110 V, 120 V, 200 V, 230 V or 240 V	

Voltage selection is made on the inside of the electrical unit PGC 1 by resoldering the tag of the transformer and in the Stirrer Control unit. The value of the fuse in the PGC 1 Control Module for 100, 110, and 120 V is 2.0 AT and for the higher voltages is 1.0 AT.

The equipment is delivered for operation at 230 V from the factory.

Tolerance:	±10%	
Frequency :	50/60 Hz	
Connected load :	210 VA	270 VA
Rated output voltage (to gun) :	10 V	10 V
Rated output current (to gun) :	1.2 A	1.2 A
Type of protection :	IP 54	
Temperature range :	+10° C to +40° C (*+50° F to +104° F*)	
Approval :	EN 50 050 FM test No. J.I. OW 7 A 6.AE (7264) Date tested 1993 PTB test No Ex-91.C.9102 Date tested 1991	

Pneumatic data

Maximum input pressure :	10 bar	
Minimum input pressure :	5 bar	
Maximum water vapour content of compressed air :	1.3 g/m^3	
Maximum oil vapour content of compressed air :	0.1 mg/kg (oil/water)	
Maximum compressed air consumption :		
Powder hose - ø 11 mm	7 m^3/h	14 m^3/h
Main compressed air input connection thread :	1/4" B.S.P (female)	

Dimensions

Width :	460 mm	460 mm
Depth :	900 mm	900 mm
Height :	1160 mm	1160 mm
Weight :	78 kg	91 kg
Useful capacity of hopper:	18.5 dm^3	

Issued 01/00

About these operating instructions

These operating instructions contain important information which is required to operate the MPS Manual Powder System. It will guide you safely through the assembly phase, give you information to convert an MPS 1 to MPS 2 and give instructions and tips for optimizing the new powder coating system. The information about functioning of the individual system components – PGC 1 Powder Gun Control, PG 1 Manual Powder Gun or PI Injector – are found in the accompanying documentation.

Issued 01/00

Manual powder system for MPS 1-S / MPS 2-S electrostatic coating with the PG 1 manual powder gun

1. Fields of application

The MPS 1-S / MPS 2-S electrostatic manual powder coating system with PG 1 powder gun are especially suited for manual coating of work pieces that are manufactured in small series.

2. Scope of delivery for MPS 1-S (standard):

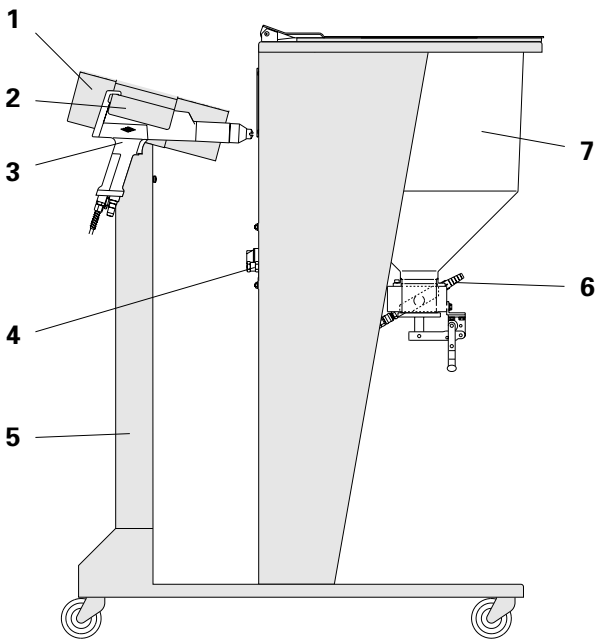

1 PGC 1 control module
2 Gun holder
3 PG 1 Powder gun
4 External air input
5 Transport trolley
6 PI injector
7 Powder hopper with stirrer

Figure 1

A PGC 1 control module (**1**), installed in a metal housing, complete with gun support (**5**) and power cable.

A transport trolley (**4**) fitted with a powder hopper (**7**), with stirrer and cover.

An external air input (**4**), mounted on the transport trolley powder hopper support panel.

A PI (**6**) plug-in injector.

A PG 1 manual powder gun (**2**) with electric cable, powder hose, rinsing air hose, and a standard PG 1 nozzle set (see corresponding Manual).

Pneumatic hoses for the conveying air (red), and supplementary air (black), also pneumatic connection from the external air input (**4**) to the control module.

Optional extras:
A cover with safety switch, which switches the drive motor off when the main cover is lifted;

A fluidizing flap with a built-in fluidizing plate, instead of a discharge flap. The powder will be loosened up in addition to the stirrer.

2.1 Supplementary material for MPS 2-S (standard)

A second PGC 1 control module, complete with gun support, special power cable, and connecting cable.
A second PI injector.
A second PG 1 Manual powder gun with electric cable, powder hose, and rinsing air hose.
Pneumatic hoses for the conveying air (red), supplementary air (black), also a pneumatic connection with a double air distributor from the external air input to the control module.
Two connecting plates.

Issued 01/00

Functional description

The agitated powder in the powder hopper is sucked into the injector, fitted on the bottom of the powder hopper, by the conveying air (**1.2** - red hose) passing through it. The powder/ air mixture reaches the gun through the powder hose (transparent hose). The powder is electrostatically charged shortly before it leaves the gun nozzle. An electrostatic field also exists between the gun nozzle and the grounded work piece.
The electrostatically charged powder sprayed onto the work-piece adheres to the latter's surfaces.
The powder is agitated by the stirrer arm in order to prevent it from compacting.
The conveying air and the supplementary air are regulated on the control module.
The function of the injector is explained in the corresponding Manual.
The arrows in Figure 2 show the direction of flow and the letters and numbers indicate the connection points at the rear of the PGC 1 Control module.

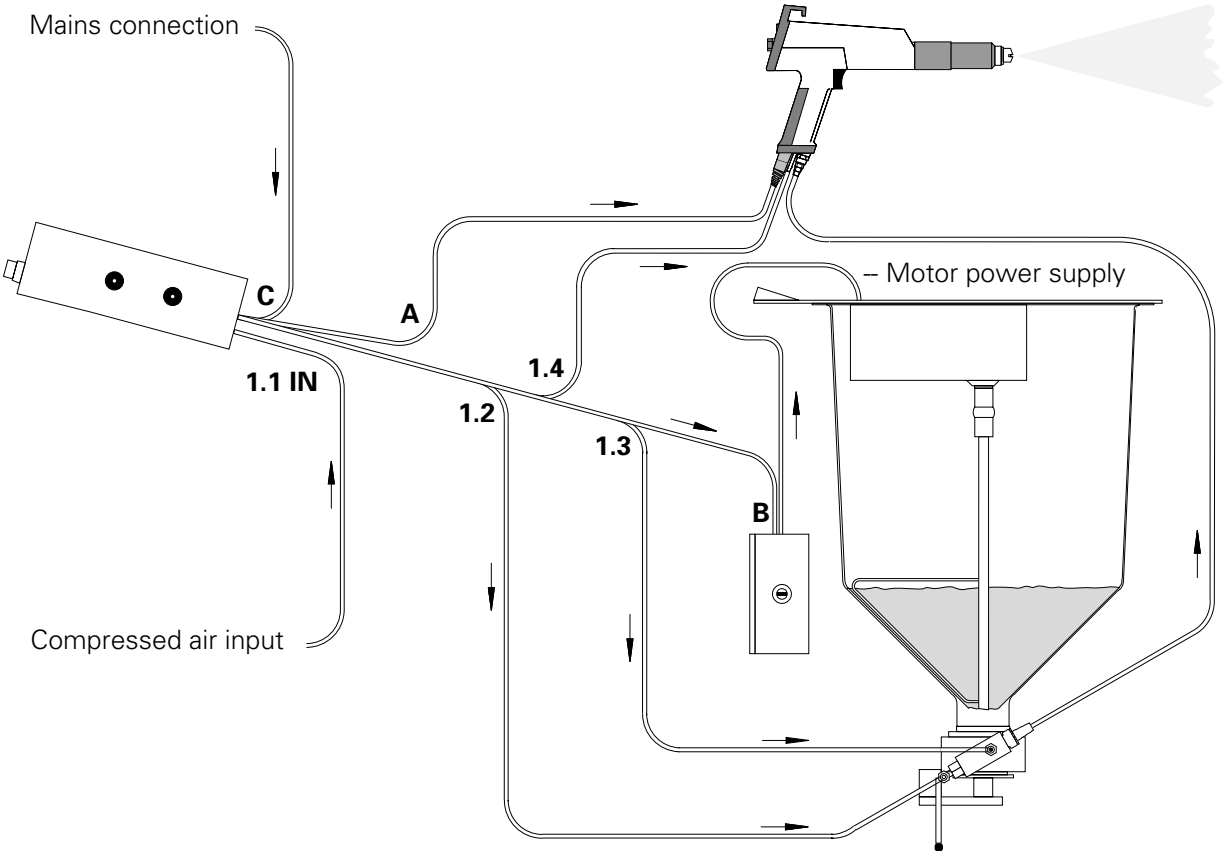

Figure 2

Installation of the powder coating system

MPS 1-S

The powder coating system is preassembled in the factory so that it is not necessary to connect cables and hoses. Refer to the Figure 2, page 3.

- The gun support can be mounted on either side of the control module housing.
- Connect the thick black hose from the external compressed air input (mounted on the powder hopper support panel of the trolley) to the inlet **1.1 IN** (**10**) at the rear of the control module.
- Fit the red hose to the conveying air outlet **1.2** (**9**) at the rear of the control module and the other end to the quick-release fitting of the injector.
- Connect the black hose for the supplementary air to the outlet **1.3** (**8**) of the control module and to the fitting of the injector.
- Connect the rinsing air hose (small diameter transparent hose) to the connection on the gun and the other end to the outlet **1.4** (**7**) on the control module.

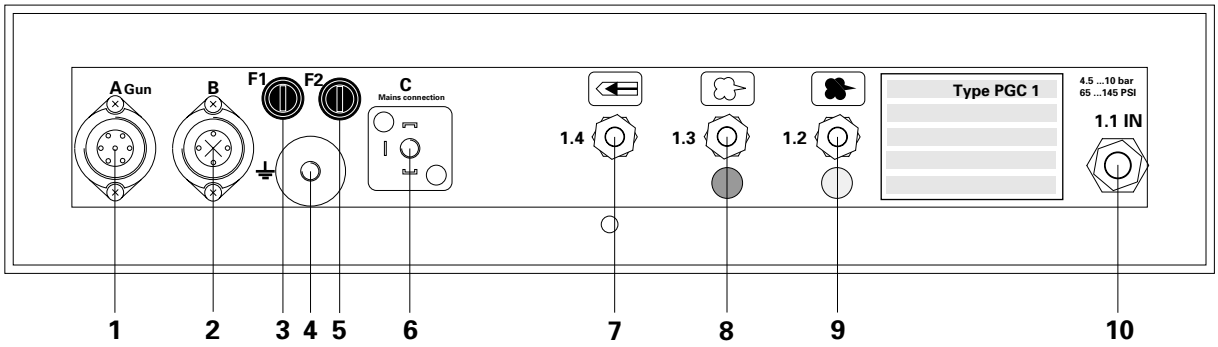

Rear panel of the PGC 1 Control Unit

1 Gun socket (**A Gun**)
2 Stirrer motor control socket (**B**)
3 Fuse holder - F1
4 Module ground connection
5 Fuse holder - F2 (N. America only)
6 Mains connection (**C**)
7 Rinsing air connection (**1.4**)
8 Supplementary air connection (**1.3**)
9 Conveying air connection (**1.2**)
10 Main air input (**1.1 IN**)

Figure 3

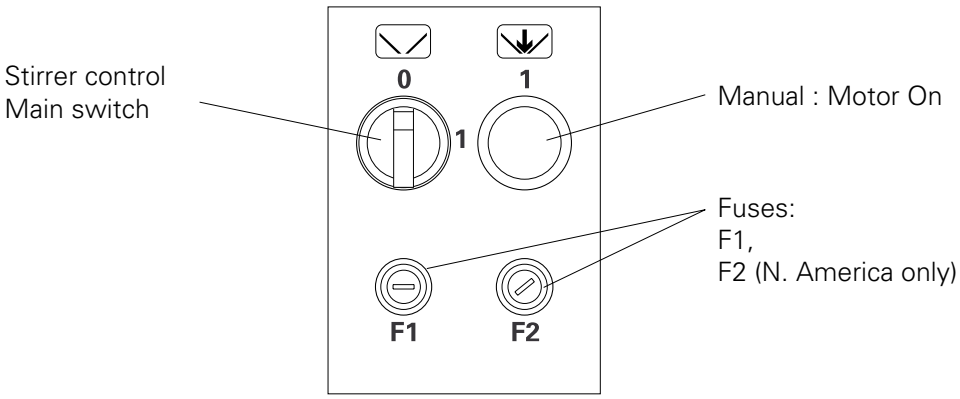

Operating elements : Stirrer control on the powder hopper support panel

Figure 4

Issued 01/00

Converting MPS 1-S to MPS 2-S

The MPS 2-S consists of a basic MPS 1-S which has been expanded to operate with a second manual gun.

Procedure for converting MPS 1-S to MPS 2-S

1. Remove the gun holder and milled nuts from the control unit.
2. Mount a connecting plate (**4** - slots facing upwards) and gun holder (**7**) on each side on the protruding studs and tighten the milled nuts.
3. Mount the second control unit (**2**) so that the protruding studs fit into the slots of the connecting plates (**4**) and tighten the milled nuts.
4. Remove the plug from the distributor head and fit the second injector (**9**) and check that it fits tightly in the mount.
5. Remove the original Mains input power cable (with two plugs) from socket - **C** at the rear of the original PGC 1 control unit, and from the Mains connection on the Stirrer control unit on the hopper support panel.

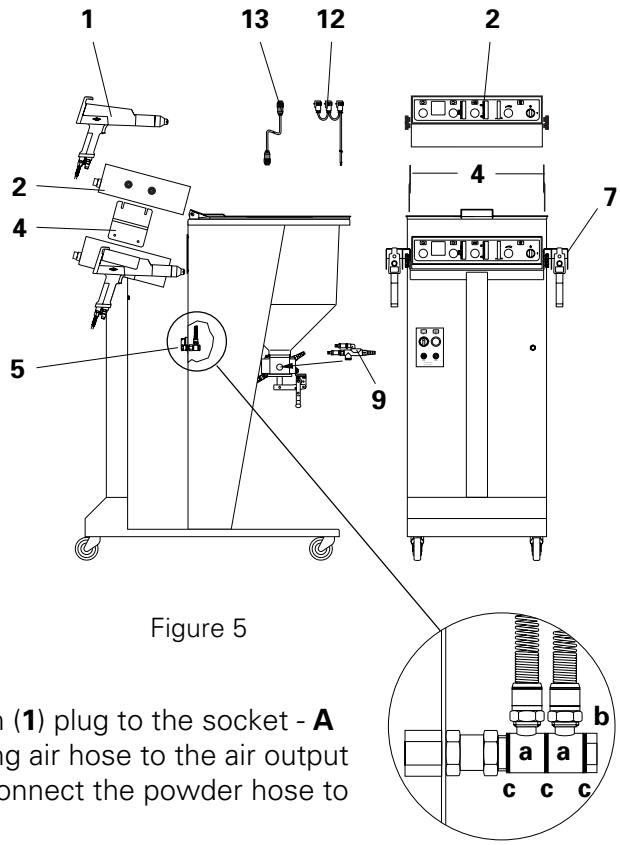

Figure 5

6. Connect the second manual powder gun (**1**) plug to the socket - **A Gun**, and connect the transparent Rinsing air hose to the air output - **1.4**, all on the rear of the PGC 1 unit. Connect the powder hose to the injector hose connection.
7. Fit the screw coupling of the air connection of the Conveying air hose (red) to the air input - **1.2**, and the Supplementary air hose (black) to the air input - **1.3** on the rear of the second PGC 1 unit, then push the corresponding quick-release connection on to the corresponding injector connection (red-red and black-black).
8. Connect two plugs of the triple plug cable (**12**) to the Mains input socket - **C** on the rear of the PGC 1 units and the remaining plug to the Mains input socket of the Stirrer control unit on the hopper support panel.
9. Connect the cable (**13**) to the Stirrer Control Motor socket - **B** on the rear of the second PGC 1 unit and the remaining plug to the corresponding socket of the Stirrer control unit on the hopper support panel.

Procedure for converting the Main compressed air input connection.

1. Unscrew the single air connection adapter from the adapter fitted to the hopper support panel. *Always use the correct size spanners!!!*
2. Fit the two air connection rings (**a**) and gaskets (**c**) according to Figure 5 on to the double air connection adapter (**b**) and screw it into Main compressed air input connection on the hopper support panel (see also "Spare Parts List", Fig. 17 on page 26).
3. Connect the black air hose to the air output - **1.4** to the new connection ring (**a**) and to the Main air input (**1.1 IN**) on the rear of the second PGC 1 unit.

Issued 01/00

Preparatory steps for initial start-up

a) Setting the correct line voltage

⚠ CAUTION

When setting the correct voltage for the PGC 1 Powder Gun Control the correct voltage for the Stirrer motor is not also automatically set. Set the required voltage on the terminal of the transformer in the Stirrer Control unit.

The factory always sets the voltage to 230 V. If the local line voltage is not 230 V, the voltage setting of the transformer must be changed by an electrician.

⚠ CAUTION

If the incoming voltage is 10% or higher than the voltage selected damage may be done to internal components. If the incoming voltage is 15% or more below the selected setting then the unit may operate erratically or not at all.

Setting the correct line voltage in the PGC 1 Control Module

1. Unfasten all connections (pneumatic and electrical) at the rear of the control module.
2. Unscrew the retaining screw at the rear of the control module.
3. Slide the module out carefully and place on a clean, flat surface.

   *When removing the unit **do not** pull on the control knobs, push the unit from the back if necessary.*
4. Unscrew the two Philips screws holding the cover plate of the electrical section.

   Carefully remove the coverplate
5. Unsolder the connecting wire from the 230 V terminal post on the transformer and resolder onto the desired voltage terminal post. ***Do not** unsolder the other wire (**0**) on the transformer.*
6. Replace the cover plate and tighten the two Philips screws.

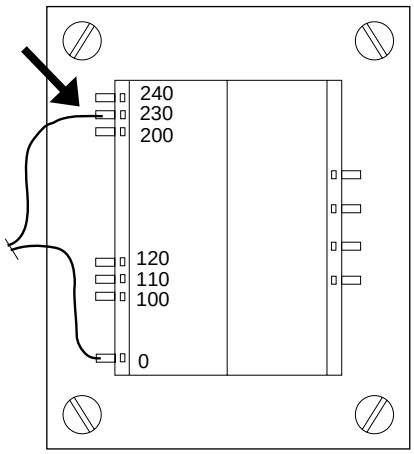

Figure 6

7. Re-insert the module into the housing and slide back into place. Screw in the retaining screw tightly.
8. Refasten all connections (pneumatic and electrical).

Setting the correct line voltage in the Stirrer Control Unit

1. Unfasten all electrical connections at the Stirrer control unit on the stirrer support panel.
2. Unscrew the screws holding the cover plate. Carefully remove the cover plate
3. Remove the connecting wire from the 230 V terminal on the transformer and connect onto the desired voltage terminal. ***Do not*** *remove the other wire (**0**) on the transformer.*
4. Replace the cover plate and tighten the screws.
5. Refasten all electrical connections.

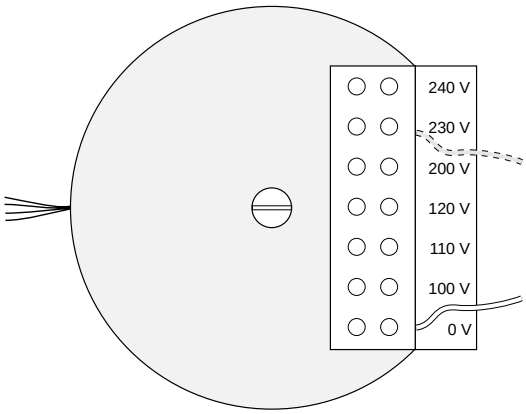

Figure 7

b) Connection to the compressed air supply

Compressed air is fed into the connection on the input adapter mounted on the trolley column. Thread connection: 1/4" B.S.P.
The compressed air must be free of oil and water.

⚠ NOTICE	**Atmospheric pressure should present in the powder hopper while it is in operation!**

c) Establishing the ground connection

Connect the ground connection cable clip on the column of the trolley to the booth or the work piece suspension device, connect the cable with the cable shoe to the ground connector of the powder hopper, and the cable with the eye to the ground connector at the rear of the control module.

d) Connecting the PG 1 powder gun

1. Connect the cable (**1**) with the 7 pin connector to the socket labelled "**A Gun**" at the rear of the control module.
2. Connect the hose for rinsing air (**9**) to rinsing air outlet **1.4** and to the gun.
3. Connect the powder hose (**7**) to the gun and to the injector (**6**).

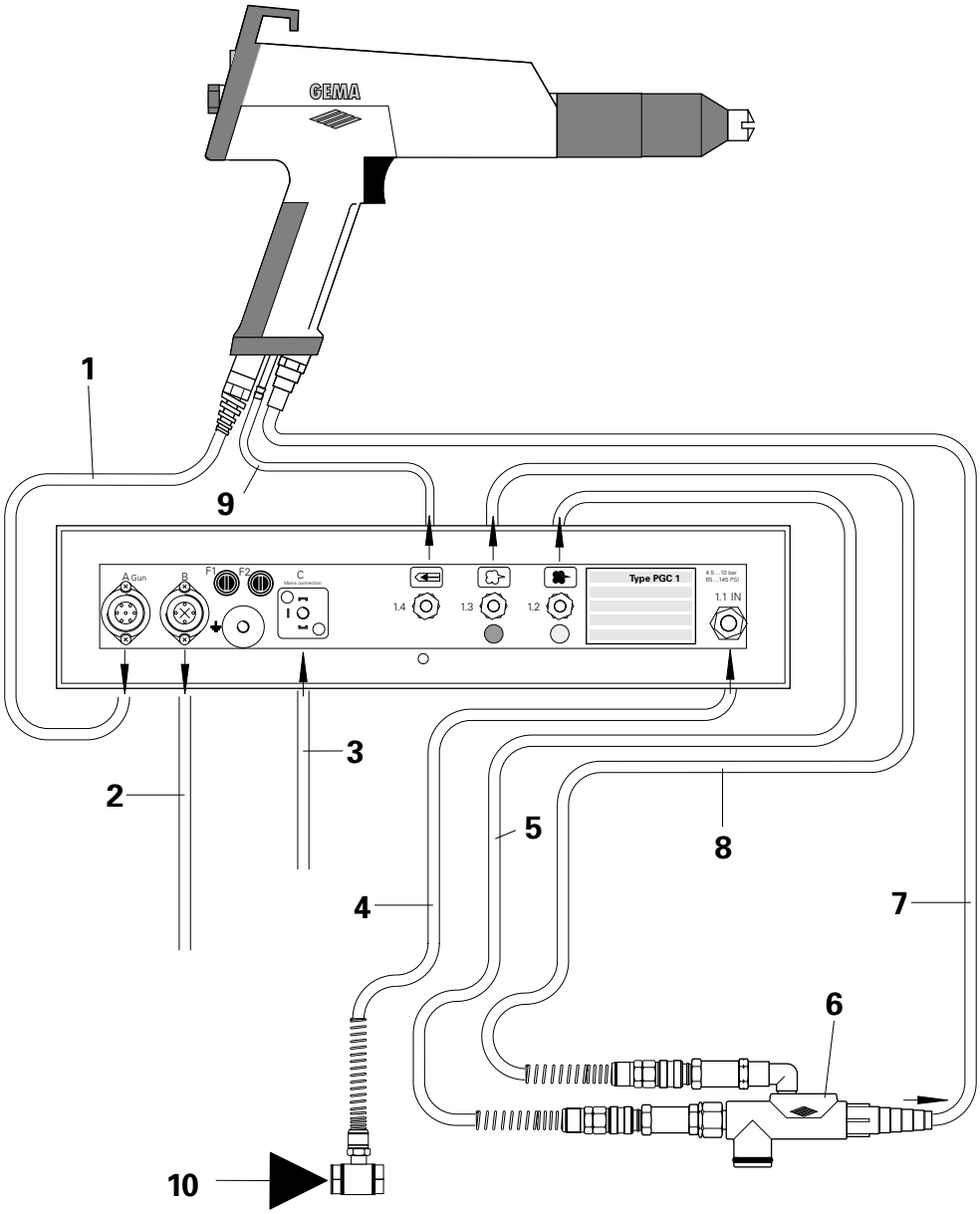

1	Gun cable	6	PI 3 injector
2	Stirrer motor control cable	7	Powder hose
3	Mains power input cable	8	Supplementary air hose
4	Internal air input hose	9	Rinsing air hose
5	Conveying air hose	10	External compressed air input

Figure 8

e) Function check

See trouble shooting guide on pages 14 and 15 for malfunctions.

1. Switch on the main switch (**9**) of the control module. The MPS 1-S is under power when the lamp inside the green main switch illuminates.
2. Switch on the motor control switch.
3. Depress the high-voltage control knob (**8**) on the control module, if not already in this position, and turn to the left-hand stop.
4. Squeeze the gun trigger. The lowest left-hand LED on the high voltage/corona current meter (**7**) should illuminate. The equipment is active.
5. Pick up the gun and point it towards a grounded work piece approximately 20 cm away
6. Set the pressure for the desired rate of powder deposit (in grammes/min, see PGC 1 Manual) on the conveying air pressure gauge (**2**). The maximum output is 3,5 bar.
7. Check on the supplementary air flowmeter (**4**) if the ball "floats" within the green sector of the scale. If it does not, turn the supplementary air control knob (**3**) to the left or right, while pulling the trigger once or twice, until the ball is positioned correctly.
8. Set the rinsing air by turning the rinsing air control knob (**5**) until the ball in the rinsing air flowmeter (**6**) "floats" within the respective green sector of the scale depending on the type of jet nozzle being used (flat jet nozzle or round jet nozzle).

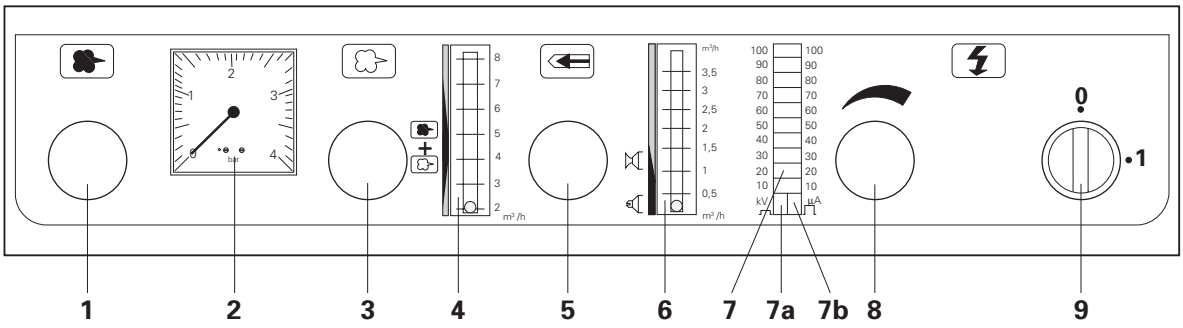

Figure 9

f) Filling the powder hopper

1. Open the hinged flap of the hopper cover. (Do not fill with the main cover open as it may be difficult to fit the stirrer arm into the correct operating position).
2. Pour the powder into the hopper. Maximum filling level of the powder is marked on the inside of the hopper (useful capacity: 18.5 dm^3 powder).
3. Close the hinged flap of the hopper cover.
4. Turn the main switch of the Stirrer control to "1". The Stirrer starts to operate.

When all the above checks have been successfully completed, the equipment is ready for use. If it fails to function correctly, consult the trouble shooting guide on pages 14 and 15.

Issued 01/00

Start-up

a) Powder stirrer

Before the stirrer motor can operate the control unit, and the stirring motor control must be switched on. When the gun trigger is pressed the stirrer arm starts to rotate, and the powder conveying is switched on.

⚠ CAUTION

After the trigger is released the stirred motor continues to run for approximately 20 seconds. The cover should only be opened *after* the stirrer arm has come to a standstill!

If the equipment is fitted with the optional main cover switch, the stirrer motor switches off immediately, as soon as the main cover is lifted.

b) Adjusting the powder output and powder cloud

The powder output is dependent on the type of powder, the powder hose length and the number of coils, the powder hose diameter, the conveying air pressure, and the dosing air. The operating principle of the injector and the influence of the supplementary air are explained in the PI Injector Manual.

1. Switch the control module, and the motor control on.
2. Check that the powder is stirred when the gun trigger is pressed .
3. Direct the gun into the booth and press gun trigger
4. Set the conveying air (see PI Injector Manual).
5. Adjust the supplementary air (see PI Injector Manual).
6. Adjust the rinsing air pressure.

   Using a flat jet nozzle.
   - Adjust the rinsing air on the control module with the control knob (**5** - *Fig. 9*) so that the ball in the flowmeter (**6** - *Fig. 9*) "floats" in the lower green area of the scale (Flat jet nozzle symbol).

   Using a round nozzle with vented deflector.
   - Adjust the rinsing air on the control module with the control knob (**5** - *Fig. 9*) so that the ball in the flowmeter (**6** - *Fig. 9*) "floats" in the upper green area of the scale (Round jet nozzle symbol).

7. Adjust the powder cloud.

   Using a flat jet nozzle.

   - Loosen the threaded sleeve by turning it approximately 45° so that the flat jet nozzle (or the extension) can barely be turned.
   - Turn the flat jet nozzle in the desired axial direction.
   - Re-tighten the threaded sleeve.

   Using a round nozzle with vented deflector.

   - Change the deflector (ø 16, 24, and 32 mm are supplied with the gun).

Caution: Never turn the deflectors, these are pushed on an O-ring fitting!

Issued 01/00

c) Powder coating - Start-up

⚠ IMPORTANT **First, check that all electrostatically conductive parts within 5 m of the coating booth are grounded.**

1. Switch on the control module.
2. Switch on the Stirrer control module with the rotary switch on the powder hopper support.
3. Press the Push button on the powder hopper support and continue to hold it down.
4. Check that the powder is stirring.
5. Release the Push button
   The stirrer motor stops.
6. Pick up the gun and point it into the coating booth, but not at the work-piece to be coated.
7. Press the gun trigger.
   When the gun trigger is pressed the stirrer arm starts to rotate, and the powder conveying is switched on.
8. Adjust the high-voltage:
   Check by observing the LED on the rear of the powder gun
9. The work-piece(s) can now be coated.

d) Shutdown

1. Release the gun switch.
2. Switch off the control module.
   The adjustment for high-voltage, rinsing air, and powder output must not be changed.
3. For work interruptions such as lunch-breaks, overnight, etc. it is only necessary to disconnect the compressed air supply.

e) Rinsing the powder hose

Before long idle periods the residual powder must be removed from the powder hose as follows:

1. Pull off the hose.
2. Point the gun into the booth.
3. Blow out the hose manually with a compressed air gun.
4. Refit the hose to the injector sleeve.

Issued 01/00

Colour change

1. Drain and clean the powder hopper, refer to page 13.
2. Blow out the powder hose with compressed air.
   The powder hose is easy to clean with a piece of foam rubber (approx. 15 mm cube) which is blown through the hose under pressure.

   *Plastic foam packing material is available as a sheet of 100 pre-cut, single cubes (**241 717**). A specially designed compressed air gun (**346 055**) is also available for this purpose.*
3. Disassemble and clean the gun, refer to PG 1 Operating Manual
4. Prepare control module for operation with new powder, refer to page 10.
5. Before starting with the coating operation, "flush" powder hose and gun with the new powder.

Maintenance schedule

Conscientious maintenance at regular intervals increases the service life of the coating system and will result in uniform coating quality over a longer period!

a) Daily maintenance

1a. Clean injector, refer to PI Injector Operating Manual.
2a. Clean gun, refer to PG 1 Powder Gun Operating Manual.
3a. Clean the powder hose, see Colour change, section 2 above.

b) Weekly maintenance

1b. Clean the powder hopper, injector, and gun. Do not refill the powder hopper until coating is to be resumed!
2b. Check ground connections between control module, coating booth, work-piece suspension device or the conveyor chain.

c) If the control module remains idle for several days

1c. Disconnect power plug.
2c. Clean the control module (refer to 1b).
3c. Disconnect compressed air supply to the coating system.

Issued 01/00

Cleaning and repairs

Cleaning the Powder hopper

1. Switch on the control module and the motor control unit
2. Place an empty container under the quick-release cover. Open the discharge flap by pushing the lever towards the control module.
3. Press the Push button on the powder hopper support and continue to hold it down. The powder then empties into the container.
4. **Switch off the control module, and the motor control unit.**
5. Remove the injector, and the plug covering the second injector hole.
6. Clean the injector and the injector connection (see PI Injector Operating Manual).

⚠ CAUTION

Danger of accidents!! ***Never put fingers or any other objects into the injector seat hole(s) at the bottom of the powder hopper when the stirrer is operating.***

7. Remove the cover (take care not to damage the stirrer arm) and wipe with a clean, dry brush, and a clean cloth.
8. Carefully close the cover again (taking care of the stirrer arm). Fit the injector, the second injector plug, and hoses.

Cleaning PG 1 Powder Gun

Frequent cleaning of the gun is recommended to assure the coating quality (see also PG 1 Powder Gun Operating Manual).

⚠ IMPORTANT

Before cleaning the gun, switch off the control module and detach the gun connector at the gun socket (A Gun).
The compressed air used for cleaning should be free of oil, and water.

Daily:

1. Clean the outside of the gun.

Weekly:

2. Detach the powder hose at the connector.
3. Detach the nozzle from the gun and clean it.
4. Blow out the gun through the powder inlet in the direction of flow.
5. Clean the gun tube with the spiral brush supplied.
6. Blow out the gun again with compressed air.
7. Reassemble and reconnect the gun.

Issued 01/00

Trouble shooting guide

For further details see the corresponding operating instructions.

Faults	Causes	Remedies
Green lamp does not illuminate although control module has been switched on.	No power: – Control module is not connected to Mains	Connect spray unit to the Mains with power cord
	– Fuse F1 defective	Replace
	– External power line fuse defective	Replace or reset
	In equipment: – Lamp defective	Replace
	– Electronics board (PCB) defective	Mail in for repair
	In the gun: – Gun cable defective	Replace, eventual mail in for repairs
	– High voltage section defective	Mail in gun for possible repairs
Stirrer does not work	– Motor switch is not switched on	Switch on
	– Stirrer not connected to powder supply	Check power supply
	– Fuse defect	Replace
	– Control cable not plugged in	Plug in
Needle of pressure gauge for conveying air stays at zero when making adjustments	Operating error: – Module is not switched on	Switch on
	– Gun switch is not pressed	Press gun switch while regulating
	In equipment:	
	– Electronics board (PCB) defective	Mail in for repair

Issued 01/00

Trouble shooting guide (continued)

Faults	Causes	Remedies
During spraying process air escapes from the gun shaft	– O-ring in the gun shaft defective or missing	Replace or insert
Gun does not spray powder although the control module is switched on and the gun trigger is pressed.	– Injector, check valve or throttling at injector, powder hose or gun clogged	Clean corresponding part
	– Insert sleeve in injector is worn	Replace
	No conveying air: – Reducing valve defective	Replace
	– Solenoid valve defective	Replace
	– Electronics board (PCB) defective	Mail in for repair
Gun sprays powder, LED at the rear of the cascade is not lit, powder does not adhere to the work-piece.	– High voltage too low	Increase the high voltage on the control module
	– Gun connector, gun cable or gun cable connector is defective	Replace defective item or mail it in for repair
	– High voltage cascade is defective	Mail in the shaft of the gun for repair
	– Electronics board (PCB) defective	Mail in for repair
Gun sprays powder, high-voltage present, powder does not adhere to the work-piece	– Work piece not properly grounded	Check the ground connection, also refer to "Safety rules"

Supplementary material for converting MPS 1-S to MPS 2-S

Carefully unpack the parts and check against the list below if all the necessary material has been supplied.

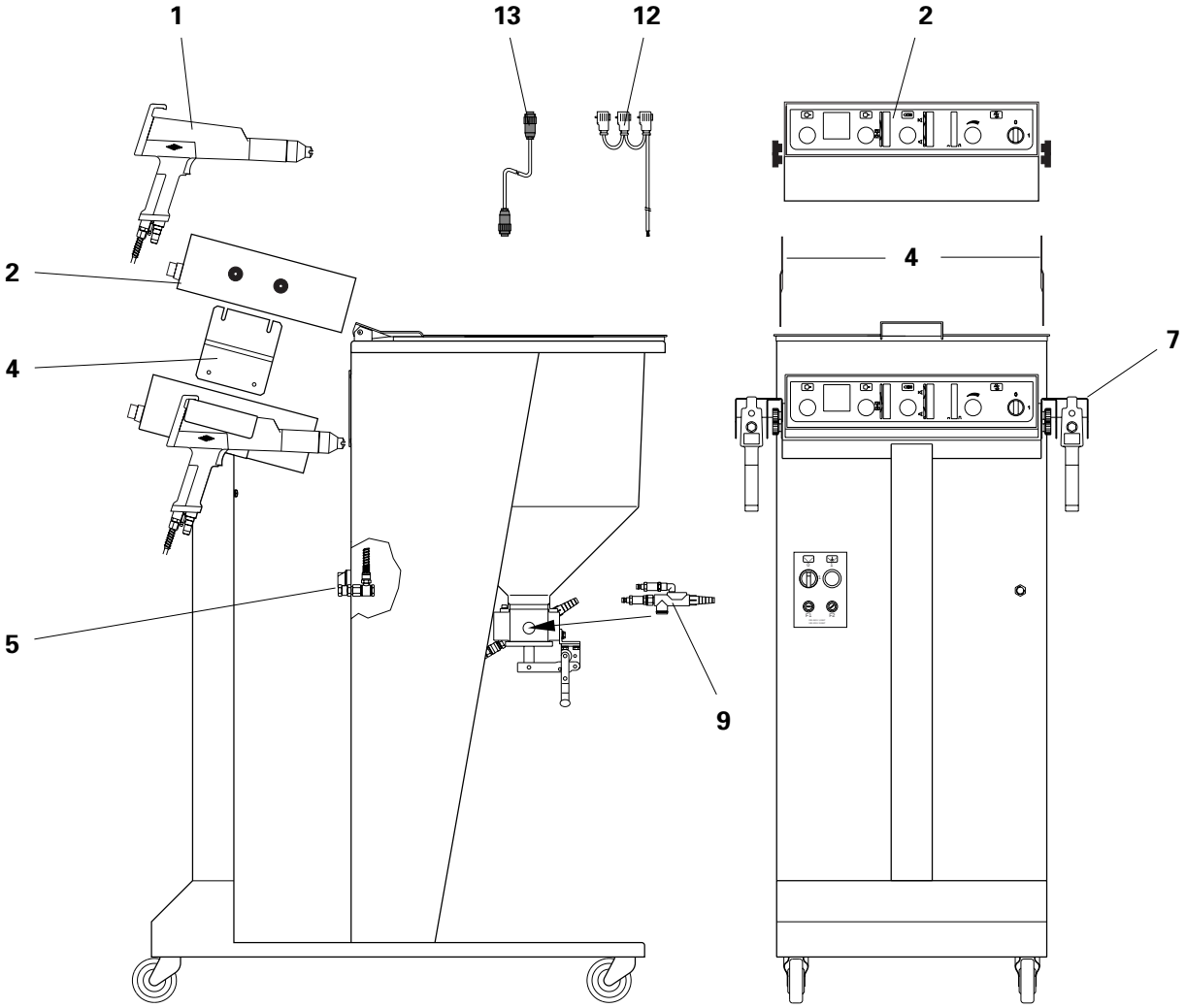

☑

- ❑ 1 PG 1 Manual Powder Gun - complete
- ❑ 2 PGC 1 Powder Gun Control unit - complete
- ❑ 4 Connecting plate
- ❑ 5 Air connection adapter
- ❑ 7 Gun holder
- ❑ 9 PI 3-H Injector
- ❑ 12 Mains cable - 3 plugs
- ❑ 13 Connection cable MPS 2-S

PARTS NOT SHOWN

- ❑ Main air connection (black)
- ❑ Supplementary air connection (black)
- ❑ Conveying air connection (red)
- ❑ Assorted spare parts set

Figure 10

Issued 01/00

Pneumatic diagram for MPS 1-S

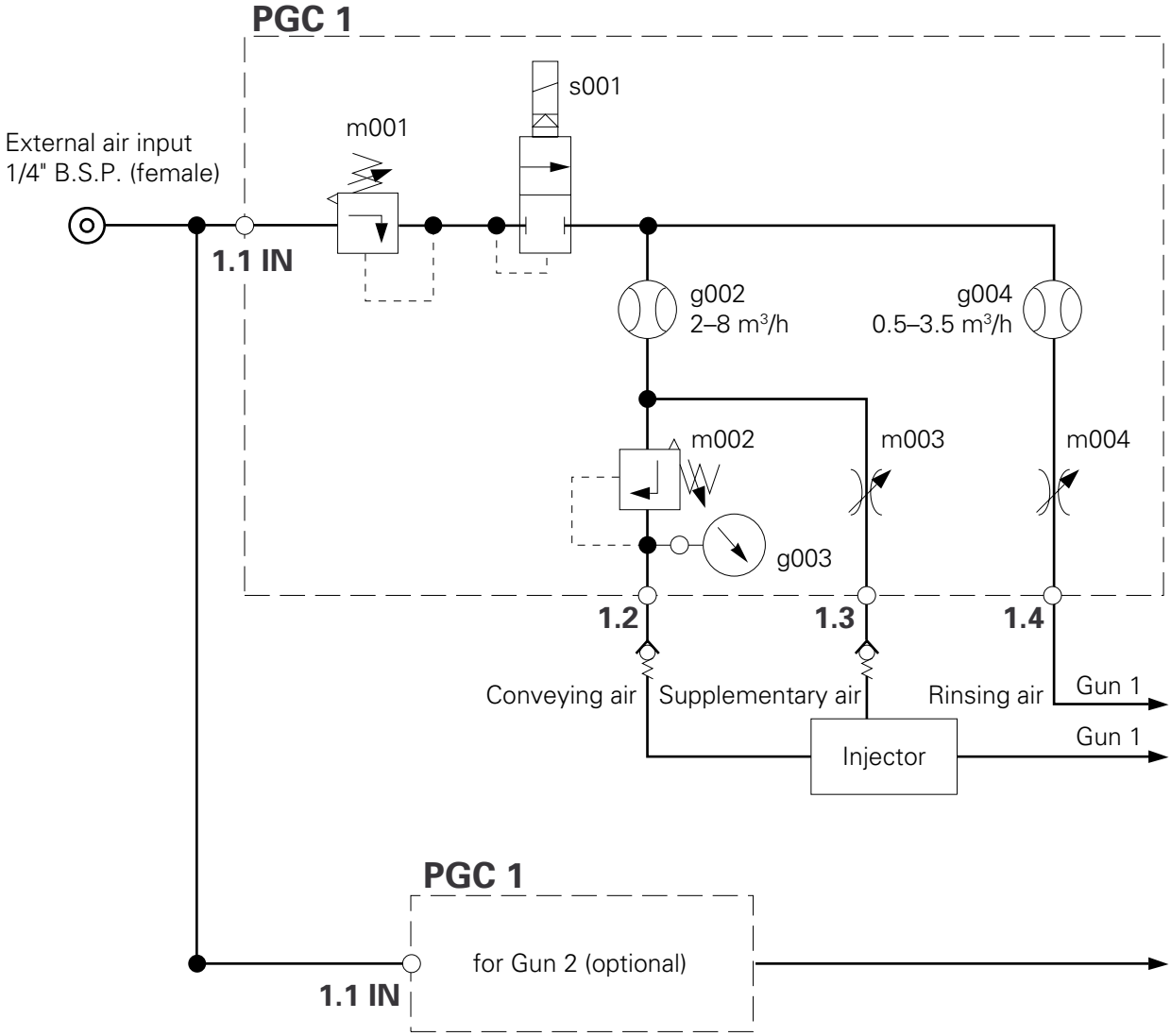

Figure 11

Wiring diagram for the MPS 1-S (CB 1 control board)

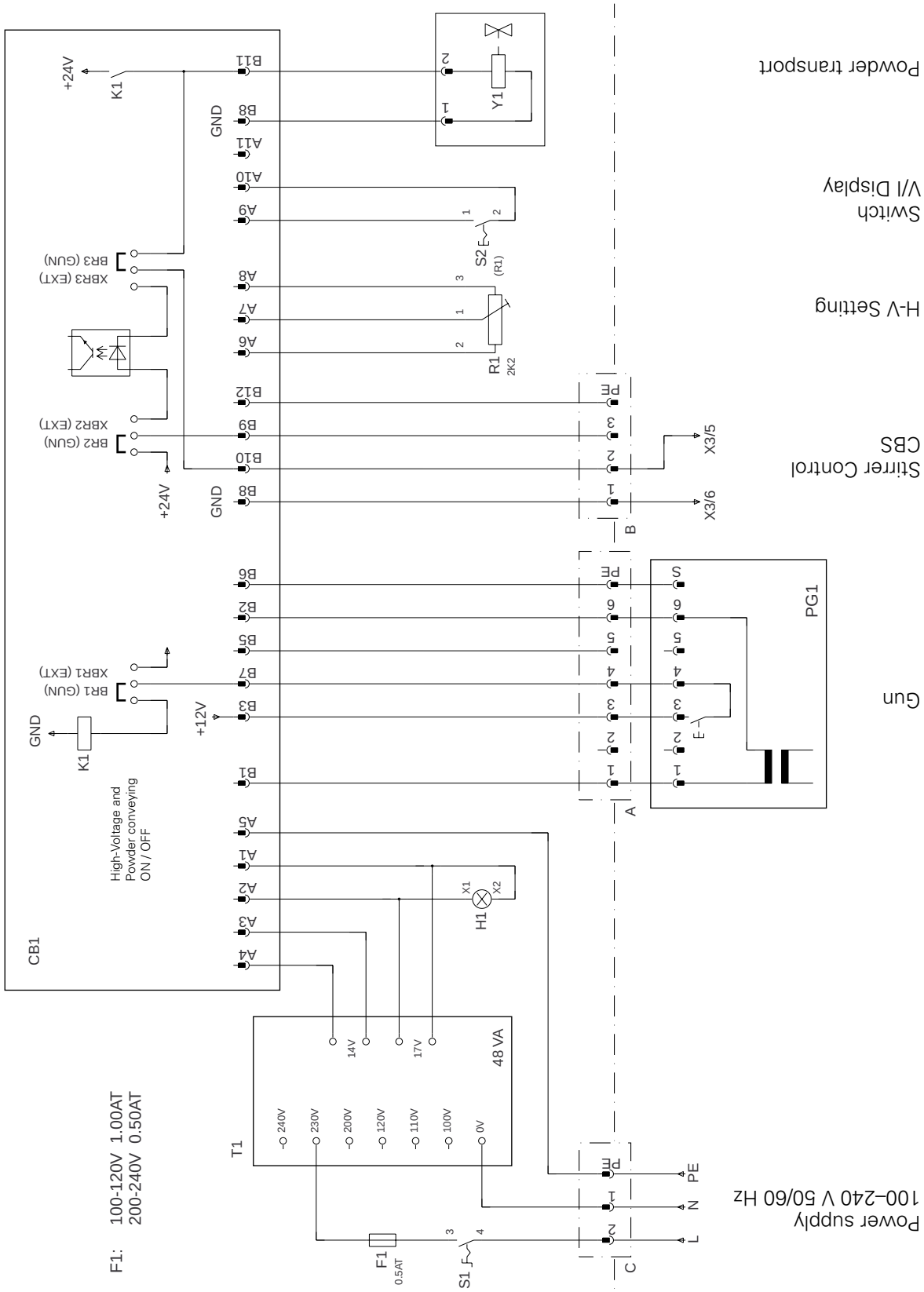

Figure 12

Wiring diagram for the MPS 1-S (CBS control board)

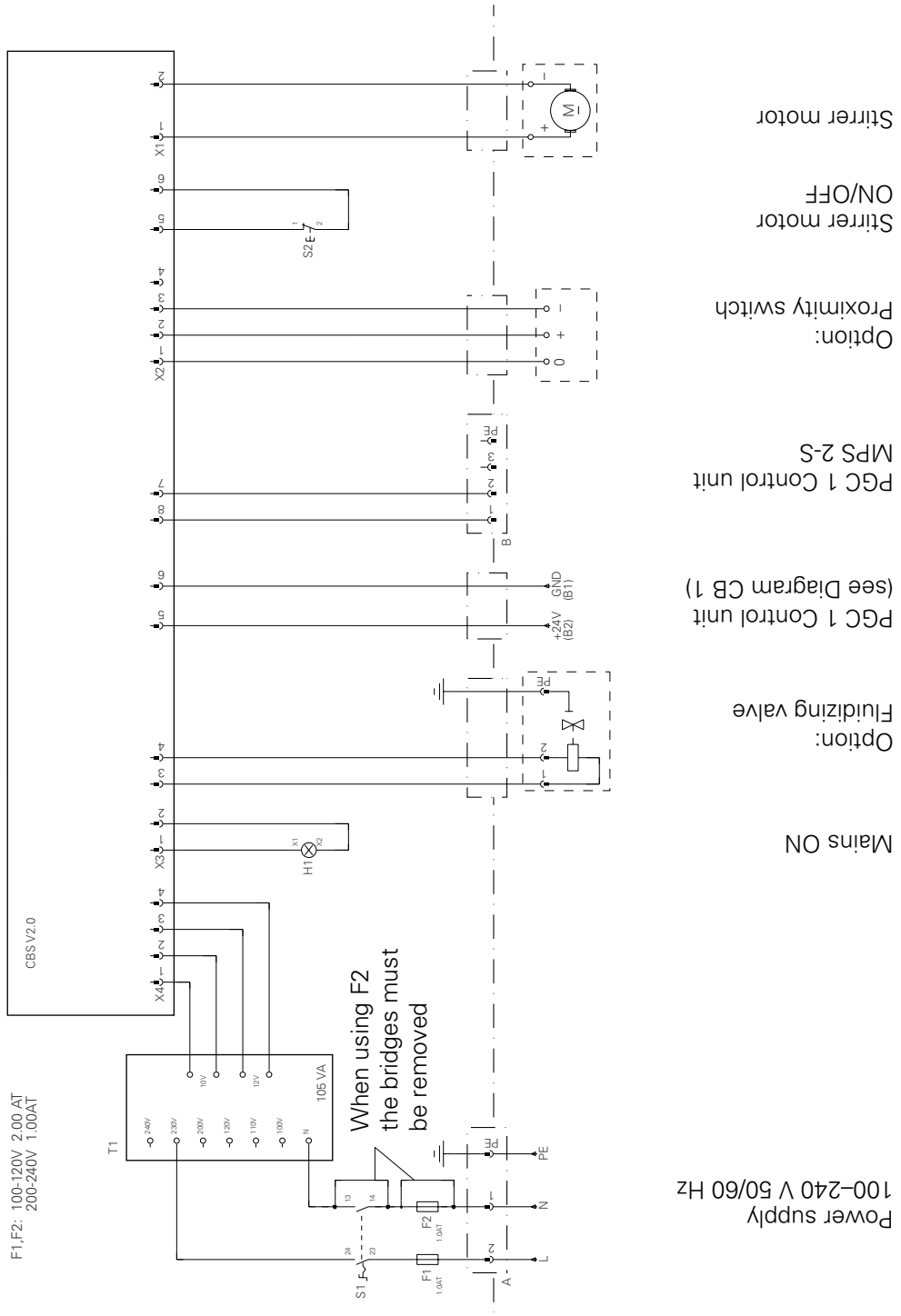

Figure 13

Notes:

Issued 01/00

Spare Parts List

Ordering Spare Parts

When ordering spare parts for powder coating equipment, please indicate the following specifications :

1. Type, and serial number of your powder coating equipment
2. Order number, quantity, and description of *each* spare part

Example:

1. **Type** MPS 1-S, **Serial no :** xxxx xxxx
2. **Order no :** 201 073, 5 pieces, fine wire fuse

When ordering cable or hose material the length required must also be given.
The spare part numbers of yard/metre ware always begin with 1.. ... and are always marked with an ***** in the spare parts list.

Wear parts are always marked with a **#**.

All dimensions of plastic powder hoses are quoted as external (o/d), and internal (i/d) diameters :

e.g. ø 8 / 6 mm = 8 mm outside diameter (o/d) / 6 mm inside diameter (i/d).

Issued 01/00

Stirrer motor control unit

	Control unit (complete)	366 900
1	Housing	366 919
2	Control board - CBS - V2.0	365 335
3	Transformer - 105 VA-P100-240 V	366 579
4	Connector cable and plug - PGC/CBS V2.0	367 150
5	Connector cable - Motor/CBS V2.0	367 249
6	Braided copper cable	366 617
10	Stirrer motor switch	245 402
11	Adapter fixture	235 920
12	Contact element	235 938
13	Bulb holder unit	235 946
14	Bulb - 12 V/2 W	237 531**#**
15	Drive push button - Green	203 483
16	Switch base	203 599
17	Fuse holder - Long	200 131
18	Fuse - F1 (1.0 AT for 200-240 V)	210 242**#**
18.1	Fuse - F2 (2.0 AT for 100-120 V)	221 872**#**
18.2	Fuse - F3 (8.0 AT for Motor)	255 459**#**
18.3	Fuse - F4 - 0.25 AT (for Printed circuit)	227 161**#**
19	Flanged socket - 4 pole/pin	206 490
20	Dust cap	206 458
21	External plug - 3 pin	200 409
22	Lead-through - PG9	222 330
23	Lead-through - PG7	235 989
24	Plug cap - PG7	256 242
25	Connection cable (MPS 1-S - 2 plugs)	368 253
26	Connection cable (MPS 2-S - PGC 1/CBS V2.0)	338 338
27	Connection cable (MPS 2-S - 3 plugs)	368 261

Wear parts
***** Indicate length required

Issued 01/00

Stirrer motor control unit

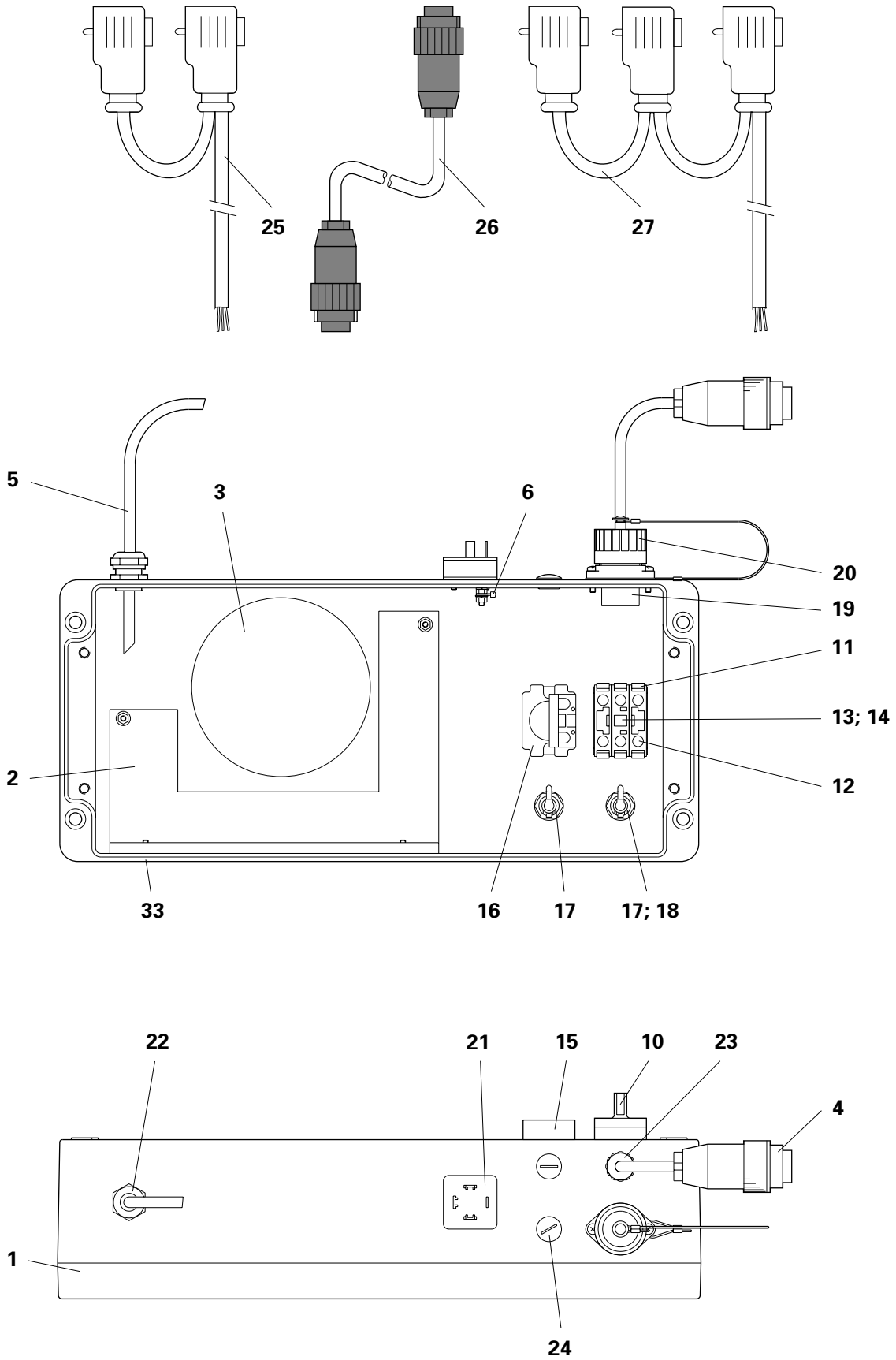

Figure 14

Stirrer powder hopper

1	Stirrer	366 862
2	Feather key	206 075
3	Stirrer motor with gear (complete)	366 927
4	Stirrer motor with pinion - 12 V DC	257 010
5	Reduction gear for stirrer	220 370
6	Universal joint	206 369
7	Stirrer control unit	see page 22
8	Gasket	304 042
10	Gasket for discharge flap (ø 75 x 3 mm)	303 240**#**
11	Discharge flap with clamp unit	303 194
12	Gasket for powder hopper	101 630*****
13	Main air input	see page 26
17	Distributor head	352 373
18	O-ring - ø 67 x 2 mm	236 403
21	Protective sleeve	206 350
23	Injector hole plug	352 365
24	O-ring	231 517

Wear part
***** Indicate length required

Issued 01/00

Stirrer powder hopper

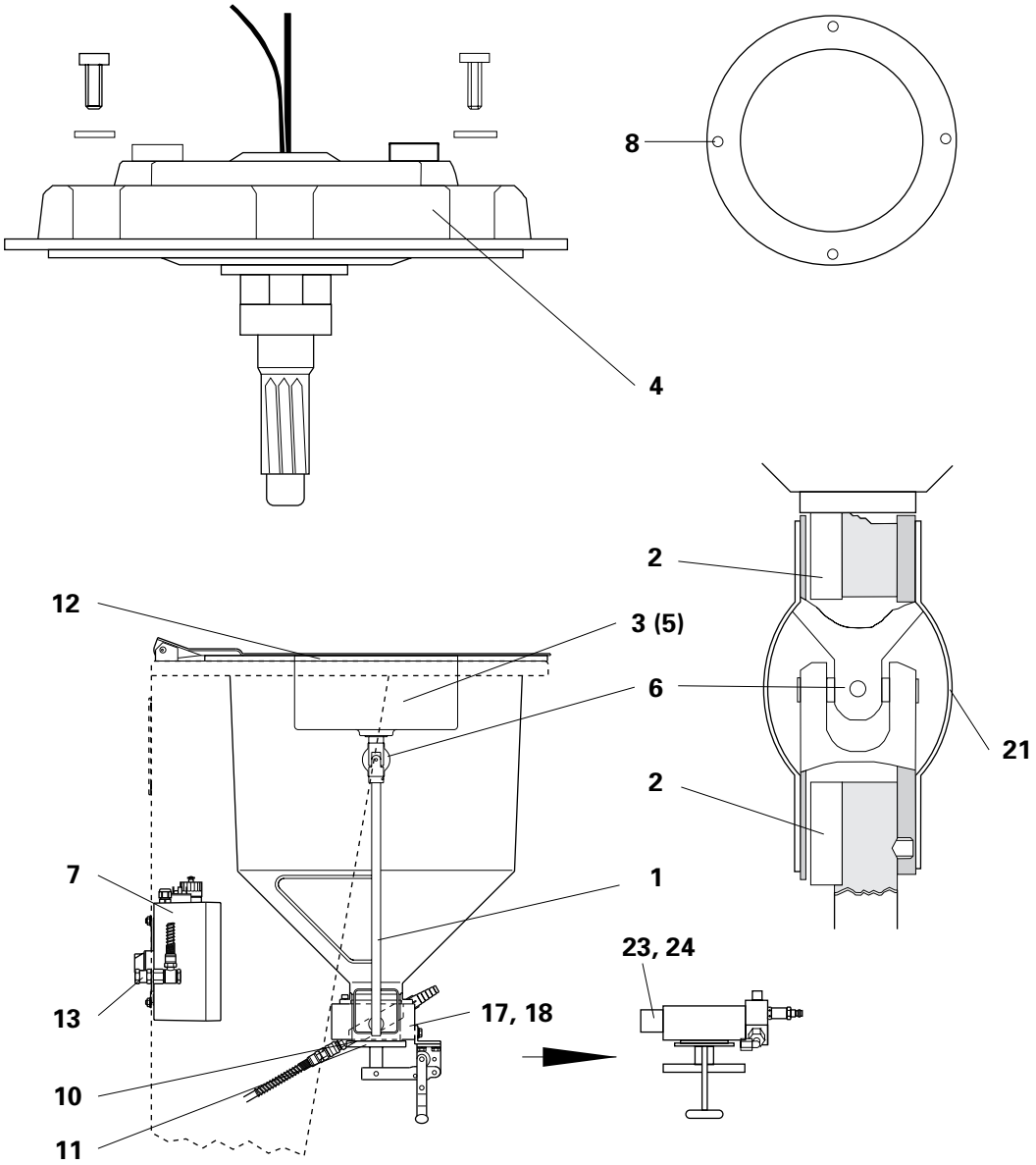

(drawings not to scale)

Figure 15

External air input unit

1	Stirrer support panel	see page 27
2	Main air connector - 1/4"-1/4"	256 269
3	Main air connector adapter - 1/4"-1/4"	256 277
4	Air connection adapter (MPS 1-S)	237 221
4.1	Air connection adapter (MPS 2-S)	237 838
5	Air connection ring - ø 8 mm-1/4"	231 886
6	Gasket - ø 13.4 x 18.0 x 1.8 mm	225 487
7	Screw connector - ø 8 / 6 mm	338 737
8	Hose - ø 8 / 6 mm (black)	103 756*
9	Quick-release connector - ø 8 / 6 mm	338 575
10	Quick-release connection - 1/4"	203 106
11	Adapter - 1/4"-1/4"	202 479

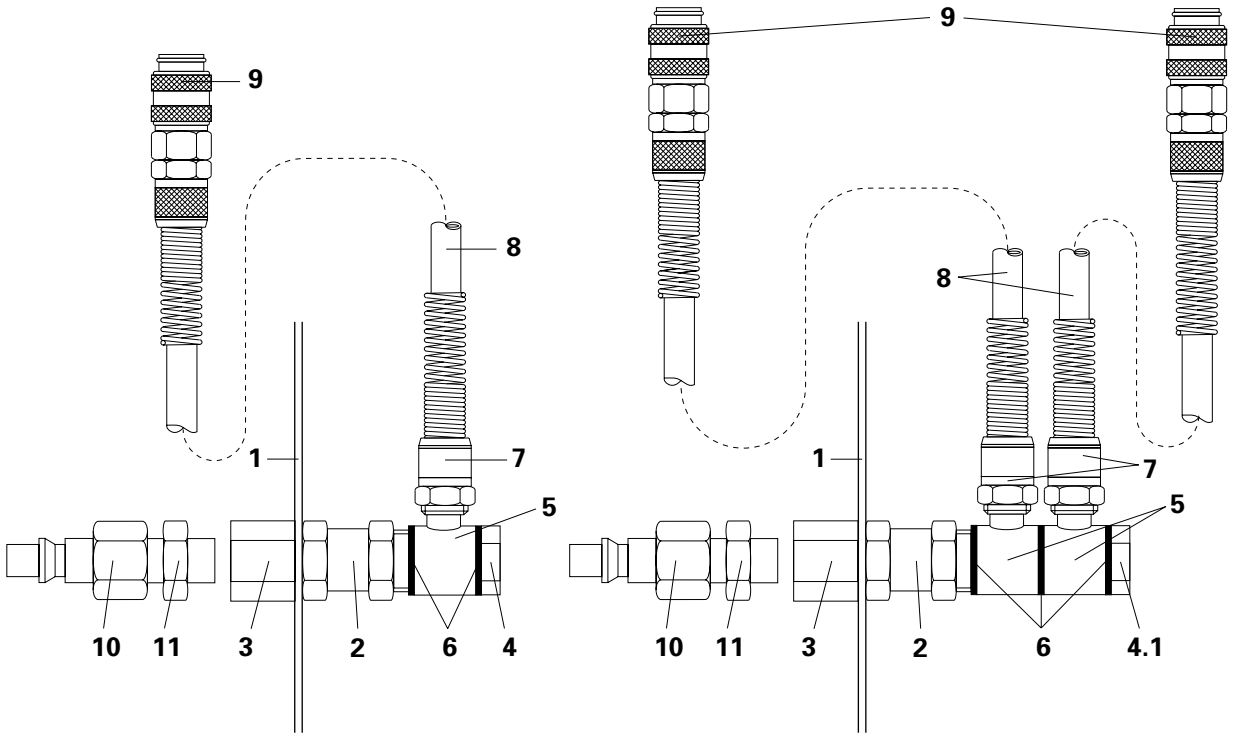

MPS 1-S **MPS 2-S**

* Indicate length required

Figure 16

MPS 1-S / MPS 2-S

1	Connecting plate (PGC-PGC)	336 262
2	PGC Control unit	340 057
3	Gun holder	301 086
4	Milled nut - M4 (not shown)	201 090
5	Trolley wheels	202 215

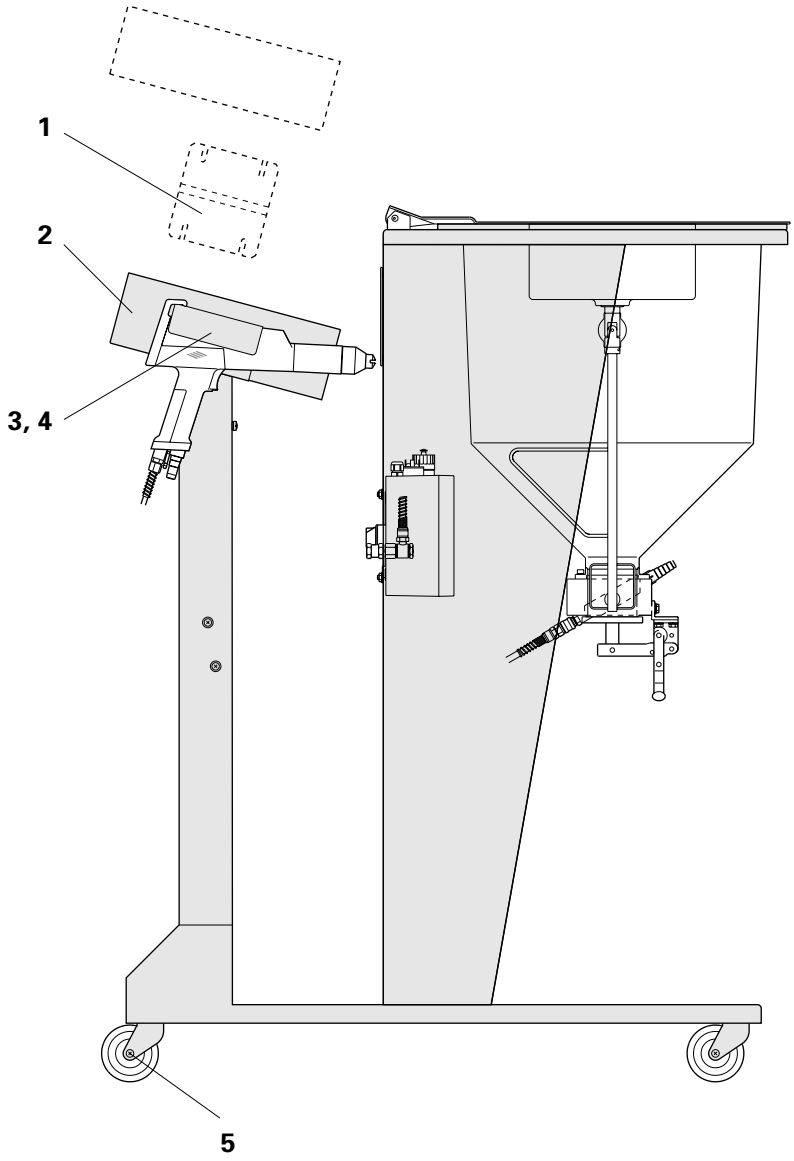

Figure 17

Documentation MPS 1-S / MPS 2-S

Printed in Switzerland

Issued 01/00