E

Operating Instructions and Spare parts list

EASY 1-S
Powder Coating Equipment
(MS01 / 02)

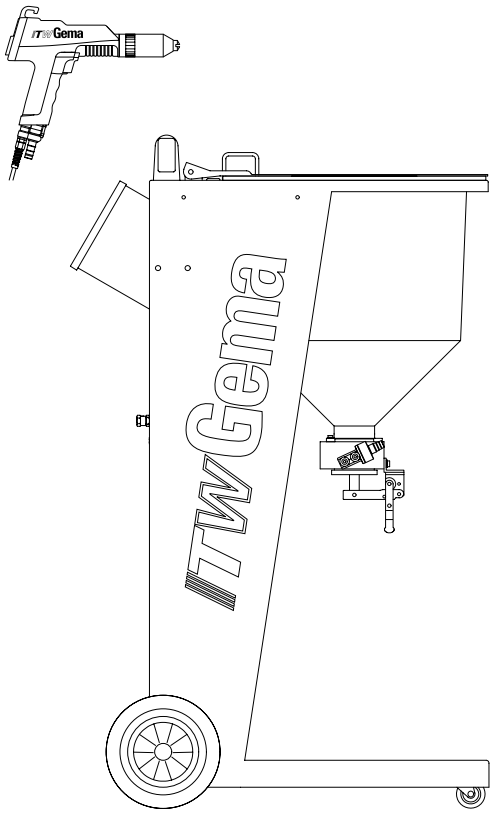

TW Gema

Issued 12/03

CE 0102 Ex II (2) D

EASY 1-S ELECTROSTATIC POWER MANUAL EQUIPMENT

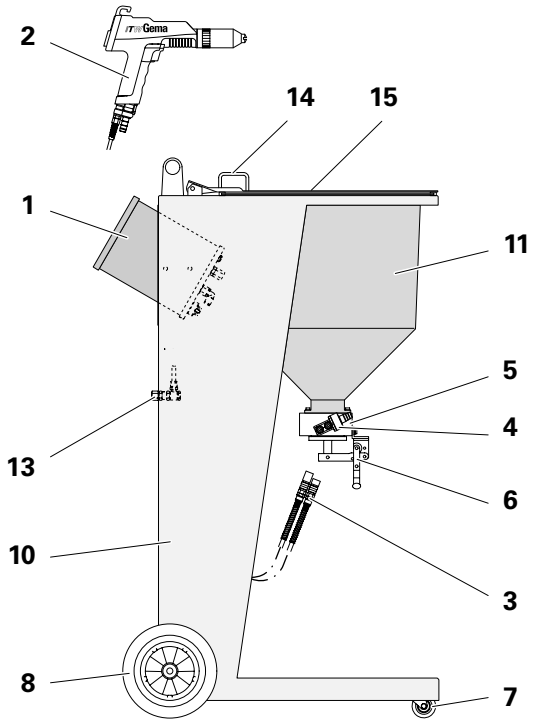

1 EasyTronic control unit
2 EasySelect Manual powder gun
3 Pneumatic hose with quick-release connection
4 OptiFlow Injector
5 Distributor head
6 Discharge flap with clamp unit
7 Swivel wheel
8 Pneumatic wheel
10 Mobile frame with hand rail
11 Powder hopper
13 External air input unit
14 Gun/Hose holder
15 Stirrer start button

CONNECTIONS ON THE REAR OF THE EASYTRONIC CONTROL UNIT

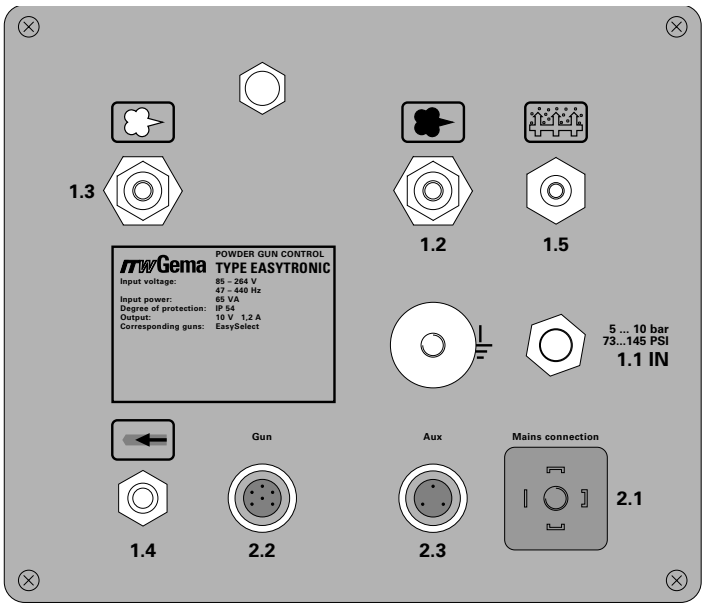

1.1 IN Compressed air input
1.2 Conveying air connection
1.3 Supplementary air connection
1.4 Rinsing air connection
1.5 Fluidizing air connection
2.1 Power supply (85–264 V)
2.2 Gun connection for the EasySelect Manual gun. PG 1 Manual gun **cannot** be connected!
2.3 Output for Vibrator (EASY 1-B only)
⏚ Grounding connection

Issued 12/03

Table of Contents

Directions for use

Technical Data of the EASY 1-S / EASY 2-S Manual Powder coating Equipment

Issued 12/03

Issued 12/03

Safety regulations for electrostatic manual powder spraying equipment

1 Safety symbols (Pictograms)

This chapter sets out the fundamental safety regulations that must be followed by the user and third parties using the powder spraying equipment.
These safety regulations must be read and understood before the powder spraying equipment is used.
The following warnings for ITW Gema operating instructions are shown here with their meanings. The general safety precautions must also be followed as well as the regulations in the operating instructions.

	**Danger!**	Danger due to live electricity or moving parts. Possible consequences: Death or serious injury.
	**Warning!**	improper use of the equipment could damage the machine or cause it to malfunction. Possible consequences: minor injuries or damage to equipment.
	**Information!**	useful tips and other information.

2 Conformity of use

1. The manual powder spraying equipment is built exclusively for the normal application of powder coating according to current recognized technological and safety regulations.
2. Any other use is considered as non-conform. The manufacturer is not responsible for damage resulting from improper use of this equipment; the end-user alone is responsible. If the manual powder spraying equipment is to be used for other purposes or other substances outside of our guidelines then ITW Gema AG should be consulted.
3. Observance of the operating, service and maintenance instructions specified by the manufacturer is also part of conformity of use. The hand held powder spraying equipment should only be used, maintained and started up by trained personnel who are informed about and are familiar with the possible hazards involved.
4. Unauthorized modifications to powder spraying equipment exempts the manufacturer from any liability from resulting damage.
5. The relevant accident prevention regulations, as well as other generally recognized safety regulations, occupational health and structural regulations are to be observed. (see appendix “Standards”)
6. Furthermore the country-specific safety regulations must be observed.

Explosion protection	Type of protection	Temperature class
CE 0102 Ex II (2) D	IP54	T6 (zone 21) T4 (zone 22)

3 Safety Technical Information

3.1 General information

The powder spraying equipment from ITW Gema is safe to operate and is built according to the latest technological specifications. This equipment can be dangerous if it is not used for its specified purpose. It should also be noted that because of this there exists:

- A danger to life and limb of the user or third party.
- A danger of damage to the equipment and other machinery belonging to the user.
- A hazard to the efficient operation of the equipment.

1. The powder spraying equipment should only be started up and used once the operating instructions have been carefully studied.
2. Before every Start-up check the equipment for operational safety (regular servicing is essential)!
3. Safety regulations BGI 764 and VDE regulations DIN VDE 0147, Part 1, must be observed for safe operation.
4. Safety precautions specified by local legislation must be observed.
5. The plug must be disconnected before the machine is opened for repair.
6. Only original ITW-Gema replacement parts should be used, because the explosion protection will also be preserved that way. Damage caused by other parts is not covered by guarantee.
7. If ITW-Gema powder spraying equipment is used in conjunction with machinery from other manufacturers then their safety regulations must also be taken into account.
8. Caution must be exercised when working with a powder/air mixture! A powder/air mixture in the right concentration is flammable! No smoking during powder coating.
9. As a general rule for all powder spraying installations, persons with pacemakers should never enter high voltage areas or areas with electromagnetic fields. Persons with pacemakers should not enter areas with powder spraying installations!

Warning! **We emphasize that the customer themselves is responsible for safe operation of equipment. ITW-Gema is in no way responsible for any resulting damages.**

3.2 Safety conscious working

Each person responsible for the assembly, start-up, operation, service and repair of powder spraying equipment must have read and understood the operating instructions and the "Safety" chapter. The operator must ensure that the user has had the appropriate training for powder spraying equipment and is aware of the possible sources of danger.

The control devices for the spray guns must only be set up and used inside of the zone 22, and the spray guns should be used in the zone 21.

3.3 Individual safety regulations for the operating firm and/or operating personnel

1. Any operating method which will negatively influence the technical safety of the powder spraying equipment is to be avoided.
2. The operator is under obligation to check the powder spraying equipment at least once a month for signs of external damage, defects or changes (including the operating characteristics) which could influence safety and to report them immediately.
3. The operator is obliged to check that the powder spraying equipment is only operated when in satisfactory condition.
4. As far as is necessary, the operating firm must ensure that the operating personnel wear protective clothing (e.g. facemasks).
5. The operating firm must guarantee cleanliness and an overview of the workplace with suitable instructions and checks in and around the powder spraying equipment.

3.4 Notes on special types of hazard

3.4.1 Power

High voltage equipment must not be opened - the plug must first be taken out – otherwise there is the danger of electric shock.

3.4.2 Powder

Powder/air mixtures can be ignited by sparks. There must be sufficient ventilation in the powder coating booth. Powder lying on the floor around the powder spraying device is a potentially dangerous source of slipping.

3.4.3 Static charges

Static charges can have the following consequences: Charges from people, electric shocks, sparking. Charges from objects must be avoided – see Earthing

3.4.4 Earthing

All electricity conducting parts and machinery found in the workplace (according to DIN VDE 0745, Part 102) must be earthed 1.5 m either side and 2.5 m around each booth opening. The earthing resistance of each piece of machinery must amount to 1 MΩ. The resistance must be tested on a regular basis. The condition of the machinery surroundings as well as the suspension gear must ensure that the machinery remains earthed. If the earthing of the machinery includes the suspension arrangements then these this must constantly be kept clean in order to keep the necessary conductivity. The appropriate measuring devices must be kept ready in the workplace in order to carry out the testing.

3.4.5 Compressed air

When there are to be longer pauses or stand-still times between working then the powder spraying equipment should be drained of compressed air. There is a danger of injury when pneumatic hoses are damaged and from the uncontrolled release and improper use of compressed air.

3.5 Prohibition of unauthorized conversions and modifications to equipment

All unauthorized conversions and modifications to powder spraying equipment are forbidden for safety reasons.

The powder spraying equipment should not be used if damaged, the faulty part must be immediately replaced or repaired. Only original ITW-Gema replacement parts should be used. Damage caused by other parts is not covered by guarantee.

Repairs must only be carried out by specialists or in ITW-Gema workshops. Unauthorized modifications can lead to personal injury and damage to machinery. The ITW Gema AG guarantee would no longer be valid.

4 Safety requirements for electrostatic powder coating

1. This equipment is dangerous if the instructions in this operating manual are not followed.
2. All electrostatic conductive parts and in particular the machinery, within 5m of the coating equipment must be earthed.
3. The floor of the coating area must conduct electricity (normal concrete is generally conductive).
4. The operating personnel must wear electricity conducting footwear (e.g. leather soles).
5. The operating personnel should hold the gun with bare hands. If gloves are worn, these must also conduct electricity.
6. The supplied earthing cable (green/ yellow) must be connected to the earthing screw of the electrostatic powder spraying hand appliance. The earthing cable must have a good metallic connection with the coating booth, the recovery unit and the conveyor chain and with the suspension arrangement of the objects.
7. The electricity and powder supply to the hand guns must be set up so that they are fully protected against heat and chemical damage.
8. The powder coating device may only be switched on, once the booth has been started up. If the booth cuts out then the powder coating device must be switched off.
9. The earthing of all electricity conducting devices (e.g. hooks, conveyor chains) must be checked on a weekly basis. The earthing resistance must amount to $\leq 1\ M\Omega$.
10. The control device must be switched off if the hand gun is cleaned or the nozzle is changed. The control device is also to be switched off when filling powder, so that ex atmosphere is not produced unnecessarily.
11. When working with cleaning agents there may be a risk of hazardous fumes. The manufactures information must be observed when using such cleaning agents.
12. The manufacturers instructions and the applicable environmental requirements must be observed when disposing of powder lacquer and cleaning agents.
13. If any part of the spray gun is damaged (broken parts, tears) or missing then it should not be used.
14. For your own safety, only use accessories and attachments listed in the operating instructions. The use of other parts can lead to risk of injury. Only original ITW-Gema replacement parts should be used.
15. Repairs must only be carried out by specialists and under no circumstances should they be carried out in the operating area. All unauthorized conversions and modifications may lead to injury or damage to machinery. The former protection must not be reduced.
16. Conditions leading to dangerous levels of dust concentration in the powder spraying booths or in the powder spraying areas must be avoided. There must be sufficient technical ventilation available, to prevent a dust concentration of more than 50% of the lower explosion limit (UEG) (UEG = max. permissible powder/air concentration) If the UEG is not known then a value of 20 g/m^3 should be used.

5 A summary of the rules and regulations

The following is a list of relevant rules and regulations which are to be observed:

5.1 Guidelines and Regulations, German professional association

BGV A1	General Regulations.
BGV A2	Electrical equipment and material.
BGI764	Electrostatic coating
BGR132	Guidelines for the avoidance of the dangers of ignition due to electrostatic charging (Guideline "Static Electricity")
VDMA 24371	Guidelines for electrostatic coating with synthetic powder [1] - Part 1 General requirements. - Part 2 Examples of use.

5.2 Leaflets

ZH 1/310	Leaflet on the use of tools in locations where there is danger of explosion. [1]

5.3 European Standards EN

RL94/9/EG	The approximation of the laws of the Member States relating to apparatus and safety systems for their intended use in potentially explosive atmospheres
EN 292-1 EN 292-2	Machine safety [2]
EN 50 014 to **EN 50 020** identical **DIN VDE 0170/0171**	Electrical equipment for locations where there is danger of explosion [3]
EN 50 050	Electrical apparatus for potentially explosive atmospheres - Electrostatic hand-held spraying equipment [2]
EN 50 053 Part 2	Requirements for the selection, installation and use of electrostatic spraying equipment for flammable materials - Hand-held electrostatic powder spray guns [2]
PR EN 12981	Coating plants - Spray booths for application of organic powder coating material - Safety requirements
EN 60529 identical **DIN 40050**	IP-Type protection: contact, foreign bodies and water protection for electrical equipment. [2]
EN 60 204 identical **DIN VDE 0113**	VDE Regulations for the setting up of high-voltage electrical machine tools and processing machines with nominal voltages up to 1000 V [3]

5.4 VDE (Association of German Engineers) Regulations

DIN VDE 0100	Regulations for setting-up high voltage equipment with nominal voltages up to 1000 V. [4]
DIN VDE 0105	VDE Regulations for the operation of high voltage equipment. [4]
Part 1	General regulations.
Part 4	Supplementary definitions for stationary electrical spraying equipment.
DIN VDE 0147	Setting up stationary electrostatic spraying equipment [4]
Part 1	
DIN VDE 0165	Setting up electrical equipment in locations where there is a danger of explosion. [4]

Source:

[1] Carl Heymanns Verlag KG, Luxemburger Strasse 449, 5000 Köln 41, or from the appropriate employers association.
[2] Beuth Verlag GmbH, Burgrafenstrasse 4, 1000 Berlin 30
[3] Generalsecretariat, Rue Bréderode 2, B-1000 Brüssel, or the appropriate national committee.
[4] VDE Verlag GmbH, , Bismarckstrasse 33, 1000 Berlin 12

TECHNICAL DATA OF THE EASY 1-S / EASY 2-S MANUAL POWDER COATING EQUIPMENT

Type	***EASY 1-S***	***EASY 2-S***
Electrical data		
Input voltage:	90-264 V	
Frequency:	47-440 Hz	
Connected load:	130 VA	210 VA
Rated output voltage (to powder gun):	max. 12 V_S	max. 12 V_S
Rated output current (to powder gun):	max. 1 A	max. 1 A
Type of protection:	IP 54	
Temperature range:	10 °C to +40 °C (+50 °F to 104 °F)	
Approval:		
Pneumatic data		
Main compressed air input:	G 1/4" (Female)	
Max. Input pressure:	10 bar	
Min. Input pressure:	6 bar	
Max. Water vapour content of the compressed air:	1.3 g/m³	
Max. Oil vapour content of the compressed air:	0.1 mg/kg (Oil/Water)	
Max. Compressed air consumption Powder hose - ø 11 mm:	7 m³/h	14 m³/h
Dimensions		
Width:	616 mm	637 mm
Depth:	734 mm	734 mm
Height:	1190 mm	1190 mm
Weight (without powder):	58 kg	67 kg
Useful capacity of hopper:	18.5 dm³	

⚠ **IMPORTANT** **The Easy 1-S / Easy 2-S can only be used with the EasySelect Manual Powder Gun**

Issued 12/03

1. ABOUT THESE OPERATING INSTRUCTIONS

These operating instructions contain all the important information which is required to operate the EASY powder coating equipment. It will guide you safely through the installation stage, give you information to convert your EASY 1 system to an EASY 2 system, also notes and tips for the optimum use of your new powder coating system.
The information about the functioning of the individual system components - EasyTronic powder gun control, EasySelect manual powder gun or OptiFlow powder injector will be found in the respective accompanying documentation.

Issued 12/03

2. EASY 1-S / EASY 2-S ELECTROSTATIC POWDER MANUAL EQUIPMENT

2.1 FIELD OF APPLICATION

The EASY 1-S / EASY 2-S Electrostatic Powder Manual equipment with the EasySelect Manual powder gun is ideally suited for manual coating of objects in small series.

2.2 SCOPE OF DELIVERY FOR EASY 1-S (STANDARD)

An EasyTronic control unit (**1**) in a metal housing with a Mains connection cable.

A mobile trolley (**10**) with a holder (**14**) for guns and hoses.

A powder hopper (**11**) with stirrer and lid.

An external air input (**13**), mounted on the transport trolley powder hopper support panel.

A plug-in OptiFlow injector (**4**)

An EasySelect Manual powder gun (**2**) with electric cable, powder hose, rinsing air hose, and standard nozzle set (see EasySelect Manual powder gun operating instructions).

Pneumatic hoses (**3**) for conveying air (red), and supplementary air (black).

Optional extras:

- A cover with safety switch, which switches the drive motor off when the main cover is lifted;
- A fluidizing flap with a built-in fluidizing plate, instead of a discharge flap. The powder will be loosened up in addition to the stirrer.

2.3 SUPPLEMENTARY MATERIAL FOR EASY 2-S (STANDARD)

- An EasyTronic control unit, control unit housing, complete with gun holder, special Mains connecting cable, and connecting material.
- A second plug-in OptiFlow injector, pneumatic kit and screw connections
- An EasySelect Manual powder gun with electric cable, powder hose, rinsing air hose, and standard nozzle set
- Pneumatic hoses for conveying air (red), supplementary air (black), and a pneumatic connection with a double air connection adapter from the pressure reducing valve to the control unit.

Issued 12/03

3. CONNECTION INSTRUCTIONS

The Manual Powder equipment is partially assembled in the factory. Only certain cables and hoses must be connected by the customer (see separate Assembly Instructions).

1. Connect the hose for the compressed air supply from compressed air circuit directly to the main air connection - **1.1 IN** on the rear of the control unit (female thread: 1/4" B.S.P.).

⚠ **NOTICE**

The compressed air must be free from oil and water.

2. Fit the grounding connection cable on the control unit with the grounding screw ⏚ , and the 5 m long grounding cable with the clamping clip on the booth or on the hanger device.
3. Connect the gun cable with the 7 pole plug on the rear of the control unit on the socket - **2.2** (Gun).

⚠ **NOTICE**

The PG 1 Manual powder gun cannot be connected!

4. Connect the hose for rinsing air on the rinsing air output - **1.4** and on the powder gun.
5. Plug the injector in, and connect the powder hose on the injector and on the powder gun.
6. Connect the red hose for conveying air to the corresponding output - **1.2** on the rear of the control unit and to the injector.
7. Connect the black hose for supplementary air to the corresponding output - **1.3** on the rear of the control unit and to the injector.
8. Connect the Mains cable on the socket adapter on socket **- 2.1**.

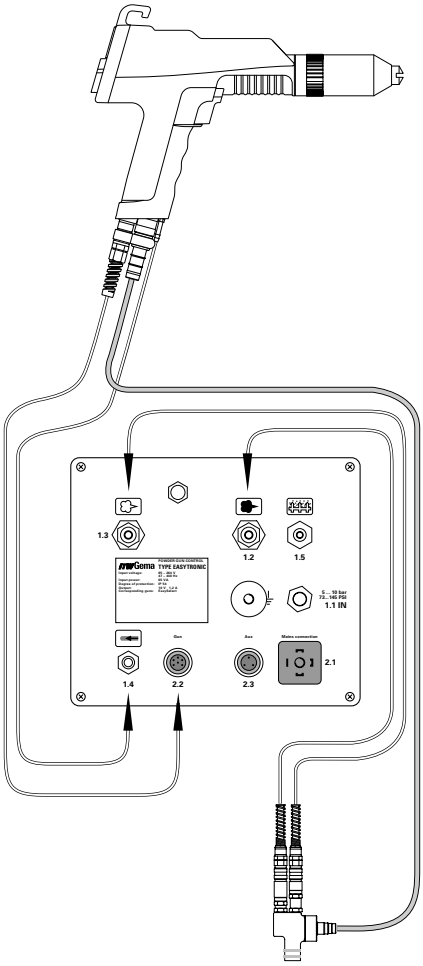

Figure 1

4. DESCRIPTION OF FUNCTION

The powder is agitated in the powder hopper by the stirrer arm and kept loose. The powder is sucked into the injector by means of the conveying air (**1**). The powder/air mixture reaches the gun through the powder hose (**2**) and is electrostatically charged in the gun nozzle. An electrostatic field also created between the gun nozzle and the grounded workpiece.
The electrostatically charged powder sprayed onto the work-piece adheres to the latter's surfaces.
Because of its conical shape of the powder hopper the powder can be used completely (optimum powder consumption).

The conveying air, the supplementary air, and the rinsing air are set on the control unit. The functioning of the injector is described in the OptiFlow Operating Instructions

The arrows in the figure below show the direction of flow

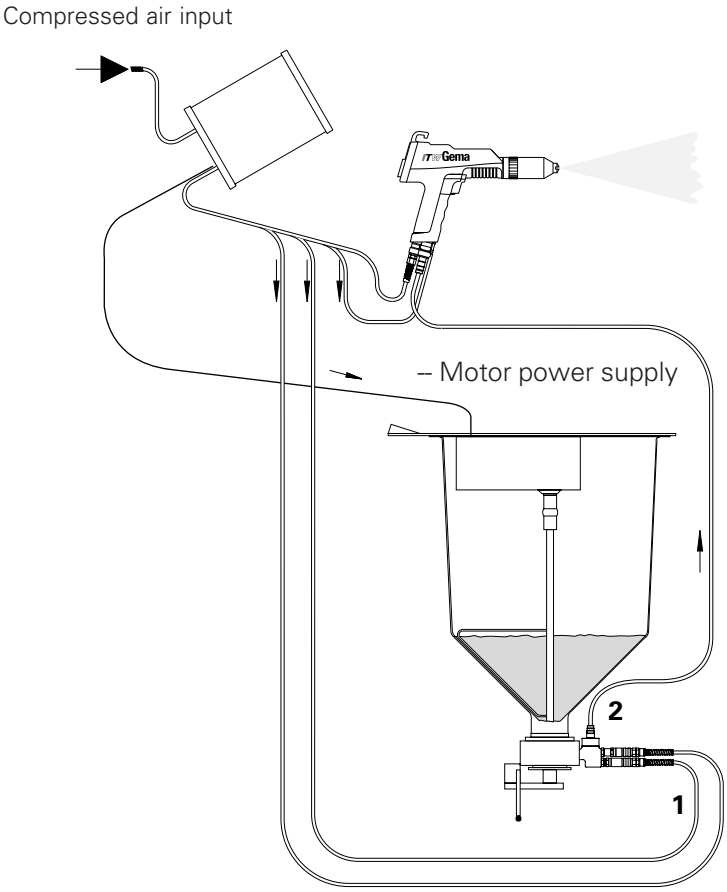

Figure 2

5. EASYTRONIC CONTROL UNIT

The operating panel of the EasyTronic control unit consists of 4 main areas: *Diagnosis LEDs, Displays, "+/–" Keys, and Function keys.*

1. The **Diagnostic LEDs** 1–8 serve to show the status of the equipment, and equipment faults. Detailed information is found in the "Troubleshooting Guide", pages 11 and 12.

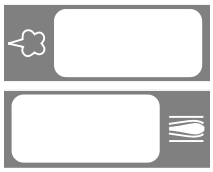

2. There are two **Displays** with whose help the following values are displayed:
   - **Powder output** (Setting range 0–100 %) Powder output in % always refers to the max. possible output volume to the total air volume setting.
   - **Total air volume** (Setting range 1.6–6.0 Nm^3/h)

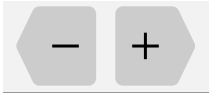

3. The **Keys** "**+**" and "**–**" are for setting the powder output, and the total air volume used.

   If the key is pressed once, the value is increased or decreases, respectively, by one step. If the key is pressed continuously, the setting changes rapidly.

4. The **Function keys** have the following functions:
   - **Electrode rinsing air for flat jet nozzles**
   - **Electrode rinsing air for round jet nozzles**

     When a key is pressed once, the corresponding function is activated, and the corresponding LED illuminates.

     If a key with an illuminated LED is pressed for longer than 1 second, the function is deactivated.

     ITW Gema recommends leaving the electrode rinsing air switched on, but can, however, remain switched off with application with very small amounts of powder.

   - **Application keys:** With these keys the electrostatic (High-voltage, and current) are automatically set so that the setting for the selected application is the optimum.

     – Settings for flat parts

     – Settings for complicated parts with depressions

     – Settings for coating over of parts already coated

     The High-voltage and current can be deactivated when the appropriate key is pressed for more than 1 second when the LED illuminates

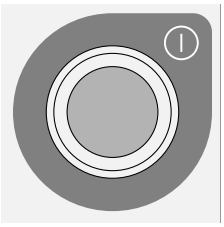

Figure 3

The EasyTronic control unit is switched on and off with a **Push button**. If the equipment is switched on, the indicator lamp is illuminated.

When the equipment is first switched on the preselected factory settings displayed:

60%	**4.0 Nm^3/h**
Flat jet rinsing	**Complicated parts**

After switching the equipment off (also when the equipment is disconnected from the Mains) the actual settings are retained.

Issued 12/03

6. PREPARATION FOR START UP

6.1 FILLING THE POWDER HOPPER

1. Open the hinged flap of the hopper cover. (Do not fill with the main cover open as it may be difficult to fit the stirrer arm into the correct operating position).
2. Pour the powder into the hopper. Maximum filling level of the powder is marked on the inside of the hopper (useful capacity: approx. 18.5 dm^3 powder).
3. Close the hinged flap of the hopper cover.
4. Press the push button on the stirrer cover, the stirrer starts up.

6.2 SWITCH THE BOOTH ON

Switch the powder coating booth on according to the operating instructions.

6.3 FUNCTION CHECK

1. Press the main switch on the control unit. The indicator lamp in the switch illuminates.

   The equipment carries out the calibration automatically. An increase in sound can be heard inside the control unit. Both displays show 888. The equipment is ready for operation after not more than 20 seconds and switches to the factory settings.
2. Take the powder gun in the hand and point at a **grounded** object in the booth, distance approx. 20 cm.
3. Press the gun trigger.

   The LED No. 8 illuminates. The High-voltage is switched on and powder is conveyed.

If all tests are positive, the control unit, and the powder gun are ready for operation. If one of the functions is not operating as expected, check this in the "Troubleshooting Guide", on pages 11 and 12.

Issued 12/03

7. DAILY START UP

7.1 POWDER STIRRER

⚠ CAUTION

After the trigger is released the stirred motor continues to run for approximately 20 seconds. The cover should only be opened *after* the stirrer arm has come to a standstill!

The stirrer motor switches off immediately, as soon as the main cover is lifted.

7.2 SETTING THE POWDER OUTPUT, AND POWDER CLOUD

The powder output is dependent on the powder, and the setting of the total air volume.

1. Switch on the control unit

SET TOTAL AIR VOLUME

2. Set the total air volume (For further information see the OptiFlow Operating Instructions)

   The total air volume is dependent on the powder hose length, the number of turns of the hose, the hose diameter, and the object to be coated.

   The value set for the total air volume can be left as it is, as long as the same powder hose is used. If the hose length and/or the hose diameter are changed, then the total air volume must be reset.

SELECT POWDER OUTPUT VOLUME

3. Select the powder output volume according to the desired coating thickness.

   The selection takes place with the aid of the keys **+** and **–** either on the control unit or on the rear of the powder gun.
   To start, a standard setting of 60% is recommended. The total air volume is maintained constant automatically.

4. Check the fluidizing of the powder
5. Point the powder gun into the booth and press the powder gun trigger

SELECT ELECTRODE RINSING

6. Select the correct electrode rinsing

   When using flat jet nozzles:

   - Press the key with the corresponding symbol . The LED of the corresponding key illuminates.

   When using round jet nozzles with air rinsed deflector plates:

   - Press the key with the corresponding symbol . The LED of the corresponding key illuminates.

(continued)

7. Adjust the powder cloud to a test object

   When using flat jet nozzles:

   - Unscrew the threaded sleeve approximately 45°, so that the flat jet nozzle (or extension) can only be slightly turned
   - Turn the flat jet nozzle to the desired axial position
   - Tighten the threaded sleeve again

   When using round jet nozzles with air rinsed deflector plates

   - Exchange the deflector plate (ø 16, 24, and 32 mm supplied with the powder gun)

7.3 POWDER COATING

⚠ CAUTION

Make sure that all electrically conductive parts within 5 m around the coating booth are grounded!

1. Take the powder gun in hand and point it into the coating booth, however, do not point it at the object to be coated yet
2. Select the application settings

   Press the corresponding application key on the control unit. The LED of the corresponding key illuminates.
3. Press the powder gun trigger
4. Coat the object(s)

7.4 REMOTE CONTROL THROUGH THE POWDER GUN

With the aid of the keys **+** and **–** on the rear of the powder gun different functions can be remotely controlled:

1. Select the application settings

   Press the keys **+** and **–** on the powder gun **simultaneously**

   Check by observing the LED display on the powder gun:

   Red = Flat parts

   Green = Complicated parts

   Red/Green (alternating) = Spraying over
2. Change the powder output

   Press the key **+** or **–** on the powder gun. The powder output is correspondingly increased or reduced.

7.5 SWITCHING OFF

1. Release the powder gun trigger
2. Switch off the control unit and the stirrer control unit

   The settings for high-voltage, rinsing air, and powder output are retained.

7.6 POWDER HOSE RINSING

After longer still stand periods the powder hose should be cleaned of powder. Proceed as follows:

1. Remove the powder hose from the hose connection on the injector
2. Point the powder gun into the booth
3. Blow the hoses through manually with a compressed air gun
4. Replace the powder hose on the hose connection of the injector again.

Issued 12/03

8. COLOUR CHANGE

1. Empty and clean the powder hopper (see page 10)
2. Blow out the powder hose with compressed air

   Powder hoses are easily cleaned by taking a cube of foam packing material and blowing it through the hose with compressed air. Use our specially designed compressed air gun (**Order No. 346 055**).
   The foam cubes can be ordered in sheets of 100 pieces (**Order No. 241 717**).
3. Dismantle the powder gun and clean (see EasySelect Manual powder gun operating instructions).
4. Clean the injector (see OptiFlow Injector operating instructions).
5. Prepare the coating equipment for start-up with new powder (see "6.1 Filling the powder hopper" page 6).

9. MAINTENANCE SCHEDULE

Regular and conscientious maintenance increases the operating life of the unit and ensures a longer constant coating quality!

9.1 DAILY MAINTENANCE:

a) Clean the injector, see OptiFlow Injector Operating Instructions
b) Clean the powder gun, see EasySelect powder gun Operating Instructions
c) Clean the powder hoses, see "Color Change, point 2

9.2 WEEKLY MAINTENANCE:

a) Clean the powder hopper, injector, and gun. Do not refill the powder hopper until coating is to be resumed!
b) Check the grounding connections between the control unit, and the coating booth, the object hanger device and the chain conveyor.

9.3 WHEN THE POWDER COATING EQUIPMENT IS NOT USED FOR A NUMBER OF DAYS:

a) Disconnect the Mains plug
b) Clean the coating equipment, see Point 9.2b
c) Turn off the main compressed air supply

Issued 12/03

10. CLEANING

10.1 CLEANING THE POWDER HOPPER

1. Place an empty container under the discharge flap. Open the discharge flap by pushing the lever towards the control module.
2. Press the Push button on the powder hopper cover and continue to hold it down. The powder then empties into the container.
3. Remove the injector, and the plug covering the second injector hole.
4. Clean the injector and the injector connection (see Injector Operating Instructions).

⚠ CAUTION

Danger of accidents!! Never put fingers or any other objects into the injector seat hole(s) at the bottom of the powder hopper when the stirrer is operating.

5. Remove the cover (take care not to damage the stirrer arm) and wipe with a clean, dry brush, and a clean cloth.
6. Carefully close the cover again (taking care of the stirrer arm). Fit the injector, the second injector plug, and hoses.

10.2 CLEANING THE EASYSELECT MANUAL POWDER GUN

Frequent cleaning of the powder gun serves to ensure the quality of the coating.

⚠ CAUTION

Switch off the control unit before cleaning the powder gun. The compressed air used for cleaning must be free from oil and water.

Daily:

1. Blow off the exterior of the powder gun, and wipe clean etc.

Weekly:

2. Remove the powder hose from the connection.
3. Remove the nozzle from the powder gun and clean.
4. Remove the powder gun from the connection and blow through with compressed air in the direction of flow.
5. Clean the powder gun tube with the spiral brush supplied.
6. Blow the powder gun through with compressed air again.
7. Clean the powder hose.
8. Assemble the powder gun and reconnect.

Issued 12/03

11. TROUBLESHOOTING GUIDE

The diagnosis LEDs 1-7 illuminate green when switched on, and LED 8 remains unilluminated. It illuminates red when the gun trigger is pulled.

Fault	Cause	Remedies
LED 1-3 unilluminated	Mains supply unit defect	Replace Mains supply unit
LED 4 illuminates red	Main valve defect	Replace main valve
LED 5 illuminates red	- Gun not connected - Gun plug, gun cable or gun cable connection defect - Remote control on the gun defect	Connect the gun Replace corresponding part or send in for repair Exchange remote control (gun cover)
LED 6 illuminates red	Solenoid valve for rinsing air of the flat jet nozzle defect	Replace solenoid valve spool
LED 7 illuminates red	Solenoid valve for rinsing air of the round jet nozzle defect	Replace solenoid valve spool
LED 8 unilluminated, in spite of the trigger being pulled and the LED 5 illuminates green.	Gun plug, gun cable or gun connection defect	Replace corresponding part or send in for repair
The gun LED remains unilluminated, in spite of the trigger being pulled, and the LED 8 illuminates red.	- Gun plug, gun cable or gun connection defect - Remote control on the gun defect	Replace corresponding part or send in for repair Exchange remote control (gun cover)
Powder does not adhere to the object, in spite of the trigger being pulled, and the gun sprays powder, the gun LED, and the LED 8 are illuminated.	- High-voltage and current de-activated. - High-voltage cascade defect. - The objects are poorly grounded.	Press the selection key (Application key) Send the gun in for repair Check grounding, see also "Safety rules"
The control lamp in the push button does not illuminate, in spite of the control unit being switched on.	No current: - Control unit is not connected to the Mains. In the equipment: - Bulb burnt out. - Power pack defect	Connect the mains cable to the unit Replace Replace

(continued)

Issued 12/03

11. TROUBLESHOOTING GUIDE (CONTINUED)

Faults	Causes	Remedies
The powder does not fluidize.	No compressed air present	Connect the equipment to the compressed air supply
	- Reducing valve closed	Open
	- Reducing valve defect	Replace
The gun does not spray powder in spite of the control unit being switched on and the trigger being pressed	No compressed air present	Connect the equipment to the compressed air supply
	- Injector, check valve or nozzle on the injector, powder hose or gun clogged	Clean corresponding part
	- Sleeve in the injector clogged	Replace
	- Sleeve not fitted	Fit sleeve
	- Fluidizing does not function	See above
	No conveying air: - Reducing valve defect	Replace
	- Solenoid valve defect	Replace
	- Electronic board defect	Send in for possible repair
Stirrer does not work	– Fuse in Stirrer defect	Replace
	– Control unit cable not plugged in	Plug in

Issued 12/03

12. BLOCK DIAGRAMS

12.1 EASY 1-S PNEUMATIC DIAGRAM

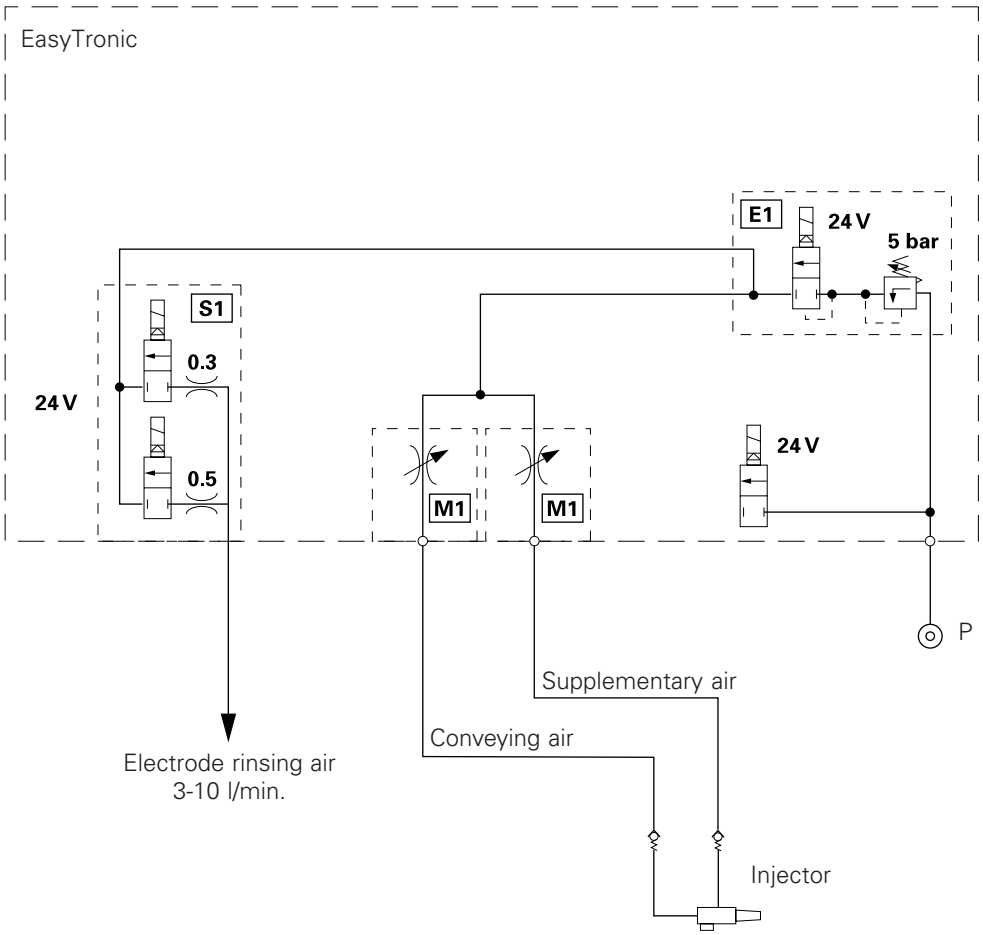

S1 = Rinsing air unit
M1 = Motor throttle
E1 = Input unit

Figure 4

Issued 12/03

12.2 WIRING DIAGRAM

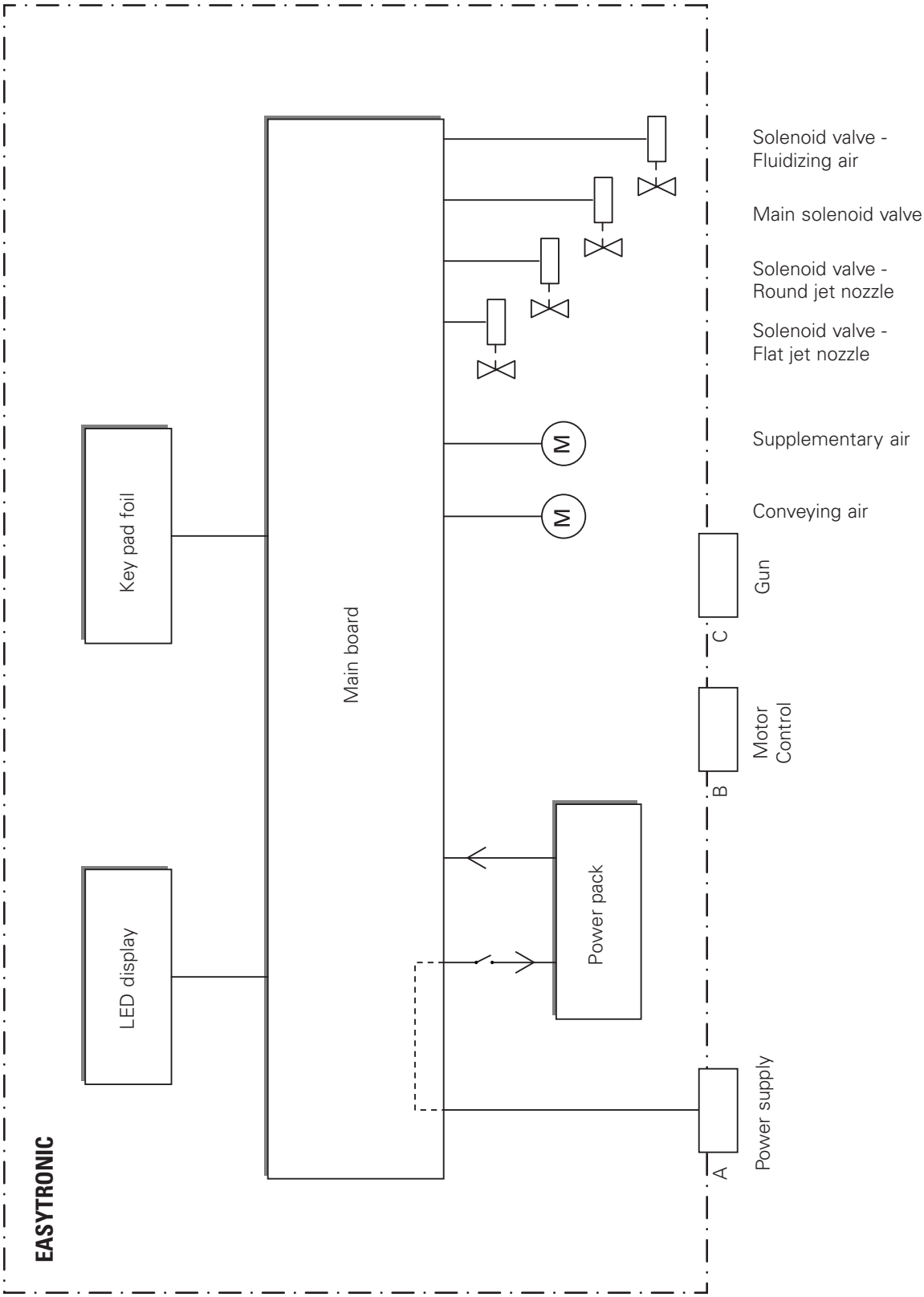

Figure 5

12.3 WIRING DIAGRAM FOR THE STIRRER MOTOR - EASY-S

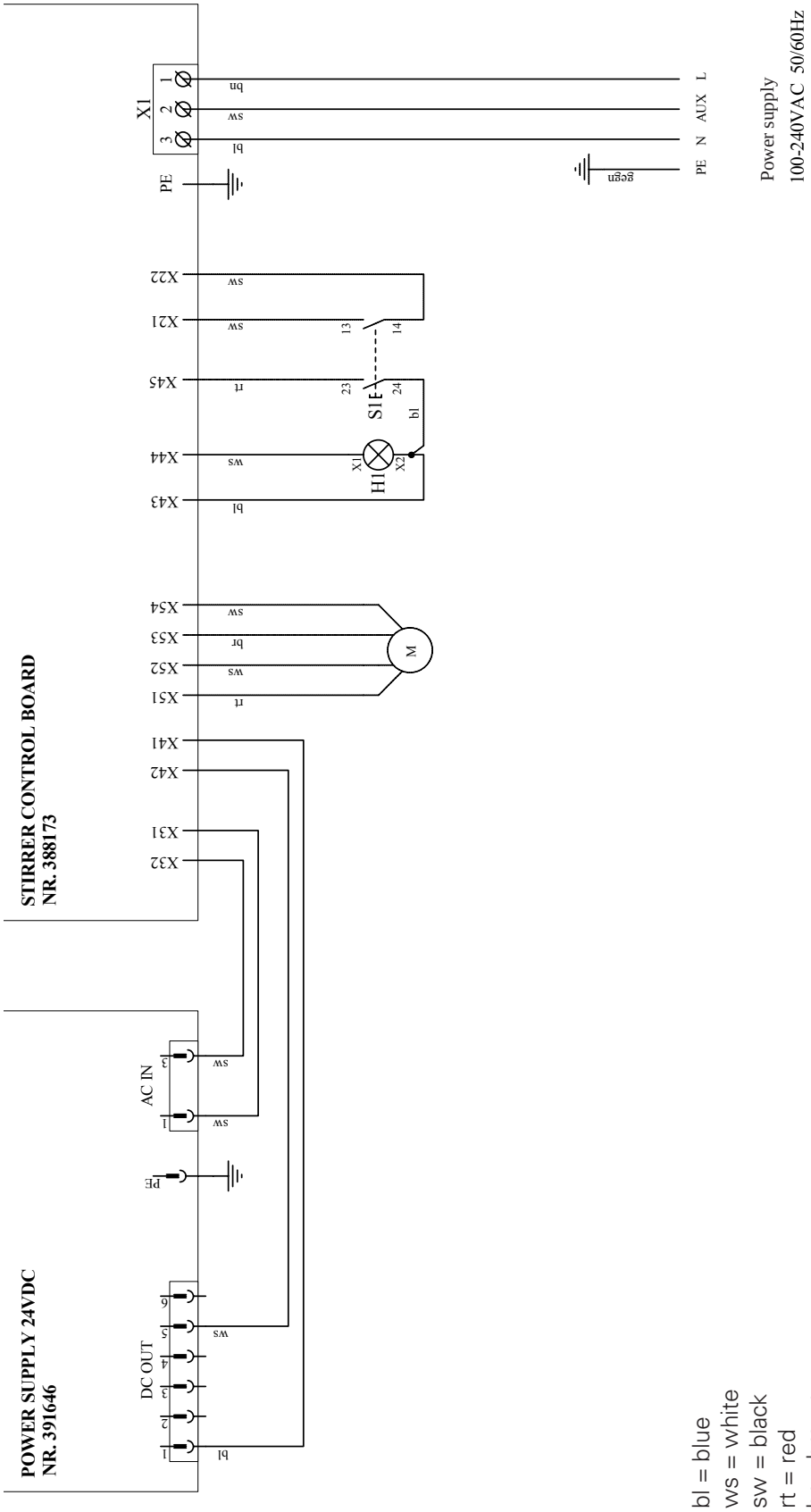

bl = blue
ws = white
sw = black
rt = red
br = brown
gegn = green/yellow

Figure 6

Issued 12/03

NOTES:

Issued 12/03

13. SPARE PARTS LIST

13.1 ORDERING SPARE PARTS

When ordering Spare parts for powder coating equipment, please indicate the following specifications:

1. Type and serial number of your powder coating equipment
2. Order number, quantity, and description of *each* spare part

Example:

1. **Type** *EASY 1-S* , **Serial No.:** *XXX XXX*
2. **Order No.:** *201 073, 5 pieces, Fine wire fuse*

When ordering cable and hose material the length required must be given.
The spare part numbers of yard/meter ware always begins with 1..... and are always marked with an ***** in the spare parts list.

Wear parts are always marked with a **#**.

All dimensions for plastic powder hoses are given as external diameter (o/d) and internal diameter (i/d):

e. g. ø 8 / 6 mm, 8 mm outside diameter / 6 mm inside diameter (i/d).

Issued 12/03

13.2 EASY-S EQUIPMENT

1	EasyTronic Powder Gun Control Unit - complete	see separate Spare Parts List
2	EasySelect Manual Powder Gun - complete	see separate Spare Parts List
3	OptiFlow Injector - complete	see separate Spare Parts List
4	Mains cable - single (Easy 1-S)	On request
5	Mains cable - double (Easy 2-S)	On request
6	Grounding cable - complete	On request
7	*Stirrer trolley - complete*	*see separate Spare Parts List*
8	*Stirrer drive unit - complete*	*see separate Spare Parts List*

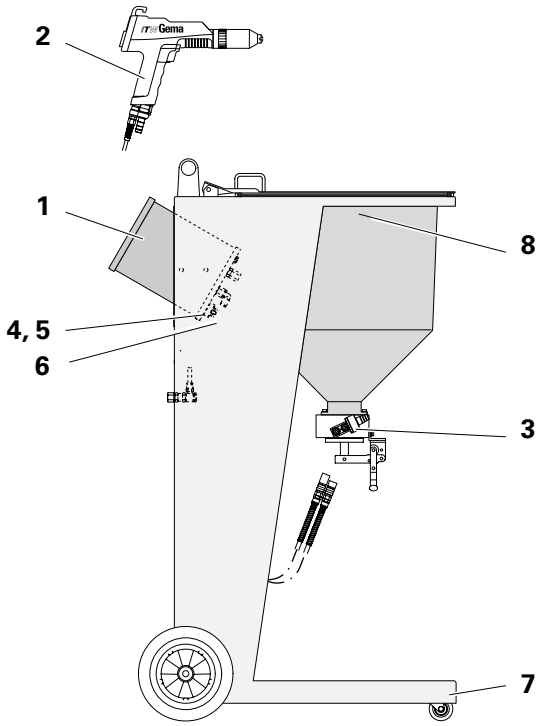

Fig. 7

Issued 12/03

13.3 EASY 1-S STIRRER UNIT

10	Cover plate for a second Powder Gun Unit	376925
11	Cap for Fluidizing air output for the Powder Gun Unit	387976
12	Spray gun/Hose holder	375705
13	Metal trolley	
14	Solid rubber wheel	260592
15	Swivel roller - D50 mm	260606
16	Round grip - D30 x 400 mm - black	261874
17	Grip bracket	261866
18	Lead-through –D14mm	206121
19	*Powder hopper*	*see separate Spare Parts List*
20	Quick-release connector - red for Supplementary air hose - D8 / 6 mm	261645
21	Quick-release connector - black for Supplementary air hose - D8 / 6 mm	261637
22	Plastic hose (Conveying air) - red - D8 / 6 mm	103500
23	Plastic hose (Supplementary air) - black - D8 / 6 mm	103756
24	Compressed air connection - See page „Compressed air connection“	
25	Elbow joint - ¼“ - 8 mm	254029

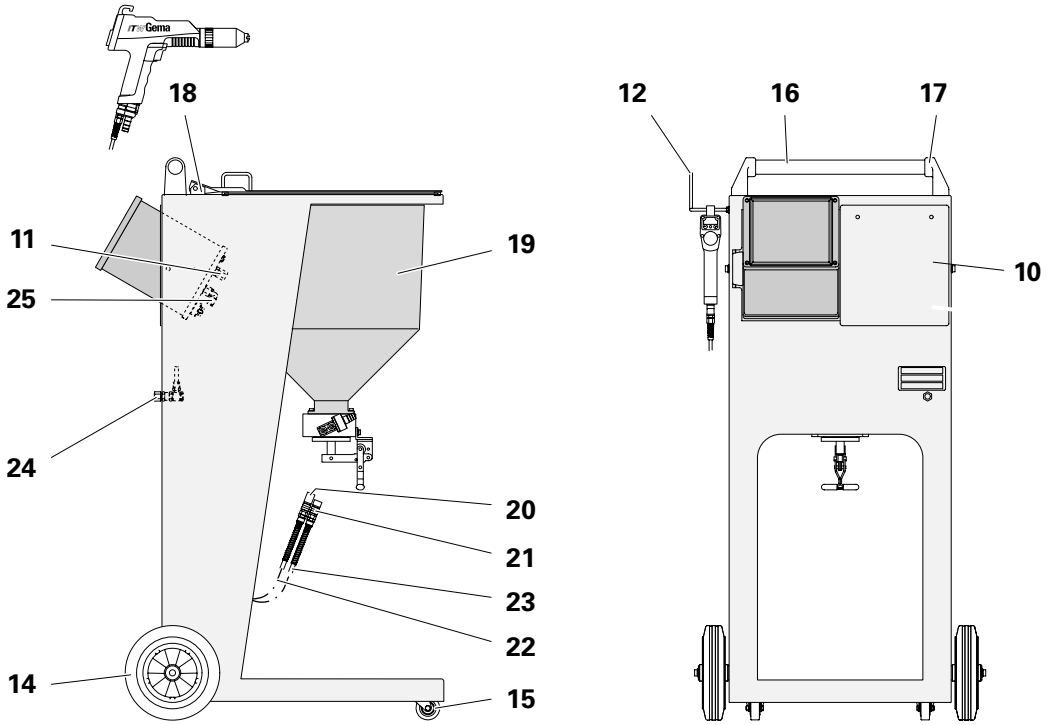

***** Indicate length required
# Wear parts

Figure 8

13.4 POWDER HOPPER

30	Mini-brush (not shown)	366 862
31	Main filler cover	393 916
32	Filler cover	380 636
33	Hinge	305 472
34	Powder hopper	366 854
35	Seal for Powder hopper	101 630
36	Cardan joint D=12 mm	206 369
	Key 4x4x16 mm (to Item 36)	206 075
	Grubscrew M4x5 mm (to Item 36)	214 728
37	Sleeve for Cardan joint	206 350
38	Distributor head	379 395
39	O Ring – D = 67*2 mm	236 403
40	Gasket for emptying valve	303 240
41	Emptying valve with clamping lever	303 194
42	Grommet	380 296
43	O Ring for the Grommet	231 517
44	Injector holder	380 288

***** Indicate length required

Issued 11/04

13.4 POWDER HOPPER

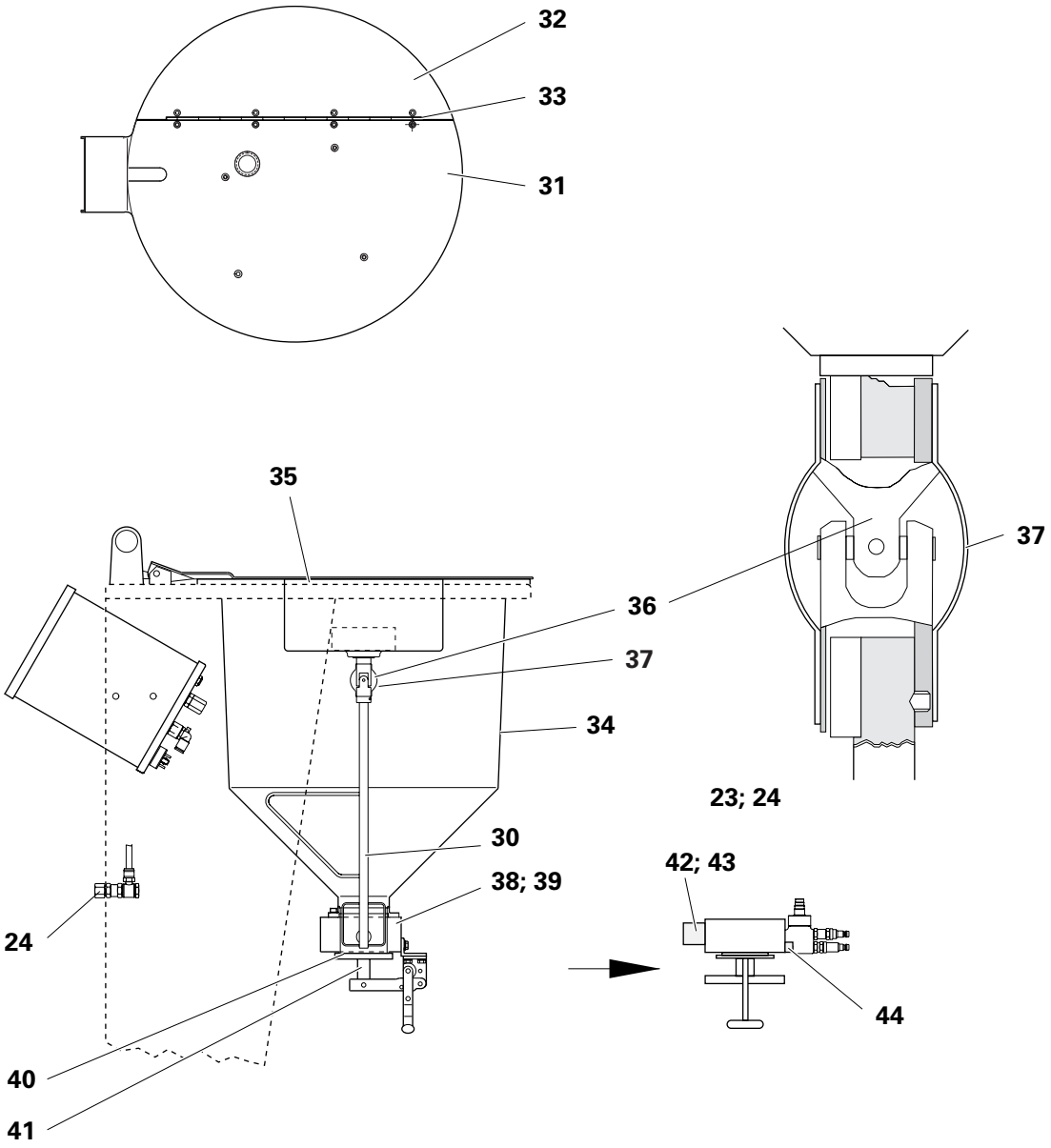

Figure 9

Stirre motor drive unit - complete

50	Drive motor with drive belt - complete	268 950
51	Drive belt for Drive motor	268 941
52	Stirrer control electronics	388 173
53	Mains power pack board	389 277
54	Mains push button complete, with cable	390 542
	Cable set, consisting of:	
55	Connecting cable power supply	390 550
56	Connecting cable 24 VDC	390 569
57	Braided grounding wire	391 867
58	Fixture for Mains power pack, consisting of two pieces each:	
	Spacer	267 775
	Cheese-head screw	245 321
	Shake proof washer	205 885
59	Fuse - 2AT	221 872
60	Adapter cable for Stirrer connection	391 905
61	Lead-through	265 780
62	Gasket for Stirrer motor	393 924

Issued 11/04

13.5 STIRRER MOTOR DRIVE UNIT

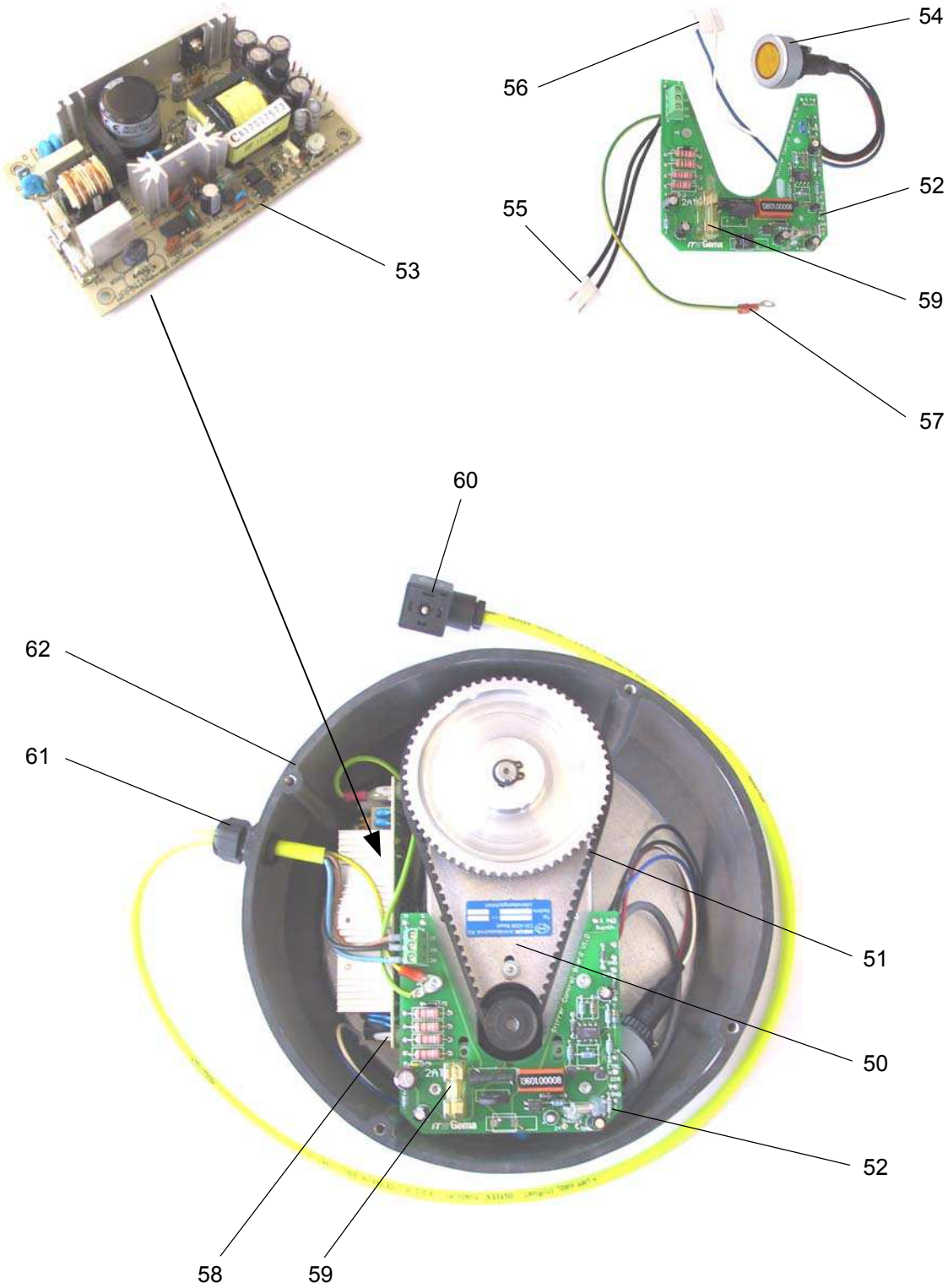

Figure 10

13.6 EXTERNAL AIR INPUT UNIT

2	Adapter - 1/4"-1/4"	256 269
3	Compressed air connection - 1/4"-1/4"	256 277
4	Air connection adapter - 1/4" for Easy 1-S	237 221
4.1	Air connection adapter - 1/4" for Easy 2-S	227 838
5	Air connection ring - ø 8 mm-1/4"	231 886
6	Gasket - ø 13.4 x 18 x 1.8 mm	225 487
8	Plastic hose - ø 8 / 6 mm - black/antistatic	103 756*
11	Adapter - 1/4"-1/4"	202 479

Wear part
***** Indicate length required

Issued 12/03

13.6 EXTERNAL AIR INPUT UNIT

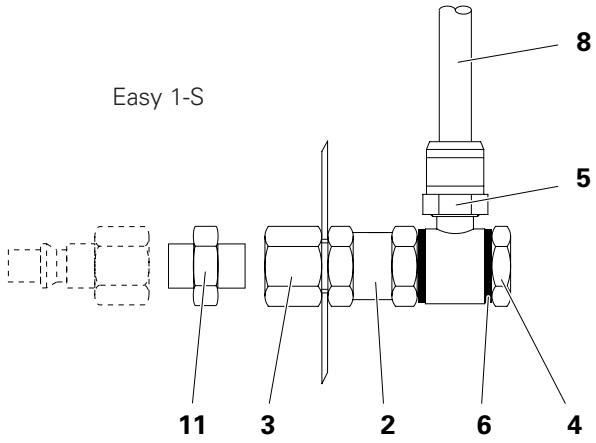

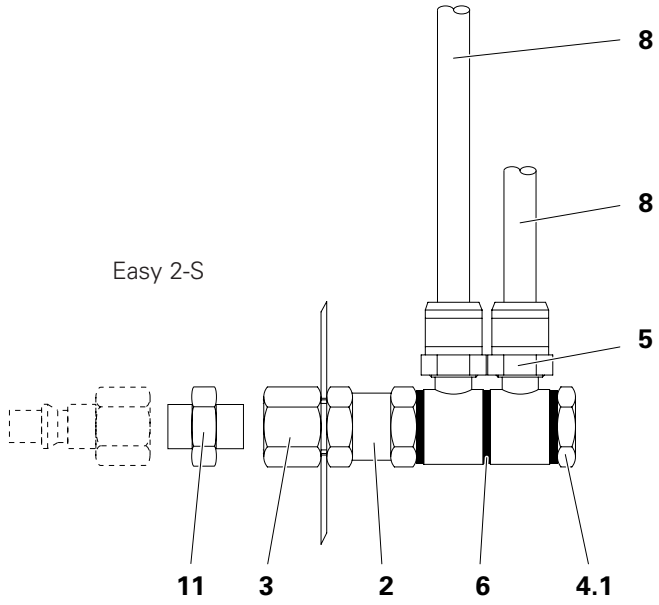

Figure 11

Printed in Switzerland

ITW Gema AG
Mövenstrass 17
9051 St.Gall
Switzerland

Tel.: +41 71 313 83 00
Fax.: +41 71 313 83 83

E-Mail: info@itwgema.ch
Internet: www.itwgema.ch

Issued 12/03