E

Operating Instructions and Spare Parts List

# PRC 3 Powder Reciprocator Control for Reciprocators with DC Motors

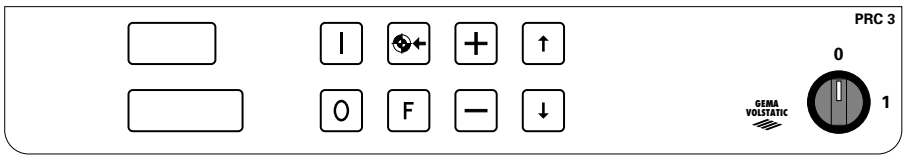


Issued 01/97

An ITW Company

Issued 01/97

# Table of contents



(continued)

## Table of contents (cont.)

## Safety regulations

1. *The PRC 3 Powder Reciprocator Control should only be switched on and operated after these Operating Instructions have been read through thoroughly.*

   Incorrect operation of the PRC 3 Control can lead to accidents, malfunctions and/or damage to the equipment.

2. **ATTENTION! The power of the reciprocator motor is very much greater than that of a human!**

   All axes must be protected from access during operation (see local safety regulations).

   *If the Reciprocator Control switches off, the carriage can slowly sink to the Zero point, also by stillstand of the carriage,* ***therefore, never stand under the carriage!***

3. The plug connections between the PRC 3 Reciprocator Control, the Power pack, and the Reciprocator should only be disconnected when the PRC 3 Reciprocator Control is switched off.

4. The connecting cables between the Power pack and the Reciprocator must be laid out so that during operation the axis cannot be damaged.

   *Observe local safety regulations!*

5. The upper stroke limit must always be set within **the height of the Reciprocator**. If an incorrect stroke limit is set (too high) this can lead to damage to the Reciprocator and/or the Booth!

6. When repairs are carried out on the Reciprocator, the PRC 3 Reciprocator Control, and the Power pack must always be disconnected from the Mains according to local safety regulations!

# Technical Data
# PRC 3 Reciprocator control

| | | |
|---|---|---|
| Number of axes per module : | | 1 |
| Number of axes per control unit : | | 1 |
| Maximum available programs : | | 64 |
| Max. stroke height (Theoretical) : | | 9.999 m |
| Positioning error : | | < 1 mm |
| Maximum speed : | | 0.6 m/s |
| Minimum speed : | | 0.05 m/s |
| Acceleration : | | 1.5 $m/s^2$ |
| Voltage range selection : | | 100 V*, 110 V, 120 V, 200 V*, 220 V, 230 V, 240 V (*Configuration changes to the PS 1 Power supply are necessary). |
| Voltage tolerances : | | ±10 % |
| Frequency : | | 48 - 62 Hz |
| Fuses : | | *100 - 120 V : F1, F2 = 10 A (slow), F3 = 500 mA*<br>200 - 240 V : F1, F2 = 5 A (slow), F3 = 250 mA |
| Power consumption : | | 30 W<br>(PRC 3 Control unit without the Power pack) |
| Operating temperatures : | | 0 °C to +40 °C (+32 °F to +104 °F) |
| Storage temperatures : | | -20 °C to +70 °C (-4 °F to +158 °F) |
| Type of protection : | | IP 54 |
| Dimensions : | Width : | 425 mm |
| | Depth : | 270 mm |
| | Height : | 88 mm |
| | Weight : | 6.2 kg |

Issued 01/97

# 1. PRC 3 Powder Reciprocator Control

| | |
|---|---|
| **ATTENTION! :** | **Read these Operating Instructions through very carefully before putting the reciprocator control unit, and the reciprocator into operation!** |

Front view

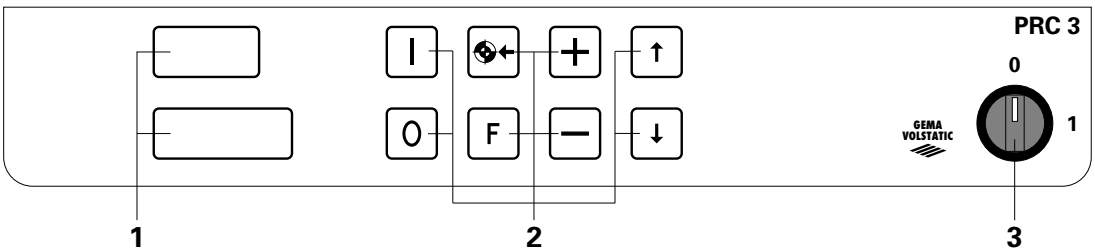


1. Display fields
2. Input keys
3. Main switch (OFF)

Figure 1.

## 1.1 Special characteristics

The PRC 3 Reciprocator Control was designed to use the latest technology and to be programmed by the user.

The new PRC 3 operating software simplifies programming, increases the overview and is user-friendly.

- Simple and clearly arranged programming through user-friendly programming levels
- 64 different programs (Procedure positions)
- Manual control through the keypad or externally with a digital control signal
- Integrated synchronization module
- All axis movements are freely programmable
- Simple adjustment by system parameters
- Fine positioning - 1mm
- Hardware available as Housing or Rack version
- Input voltages - 100, 110, 120, 200, 220, 230, and 240 V

| | |
|---|---|
| **ATTENTION! :** | **The key of the input field should only be operated with the finger tips and under no circumstances with finger nails or hard objects!** |

Issued 01/97

## 1.2 Axis control system with PRC 3

The complete axis control system consists of the PRC Powder Reciprocator Control, the PRP 1 Power pack, and the ZA 1 Reciprocator with DC Servomotor.
The PRP 1 Power pack receives the supply voltage, and control signal directly from the PRC Reciprocator Control unit.

The PRP 1 Power pack takes over the speed control through the feedback from the Tachogenerator. An optimum adjusting dynamic and torque output over the whole speed range to stillstand is thereby guaranteed. The PRC Reciprocator Control is placed on a higher hierachical level as the speed control and is responsible for the exact positioning adjustment of the carriage by evaluating the signal from the reciprocator incremental pulse generator.
This servo adjusting system connects both regulating systems and thereby fulfils all the requirements for the powder coating process.

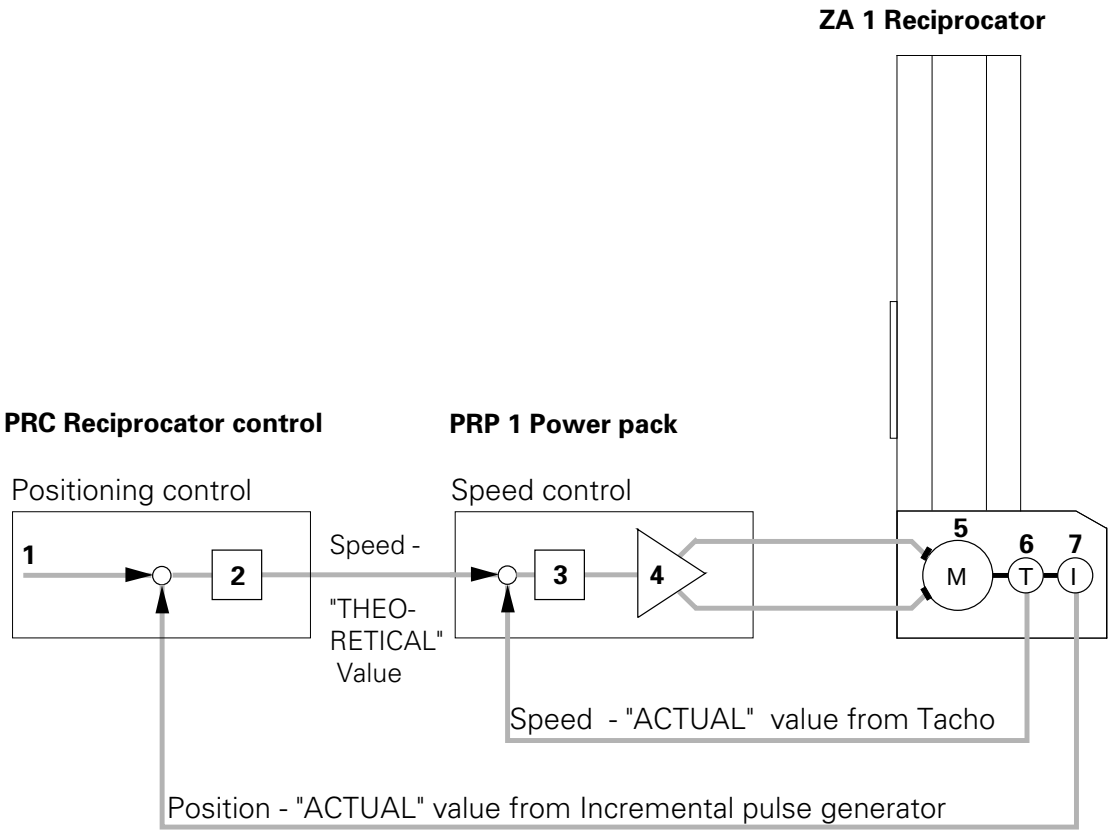


1. Positioning - "THEORETICAL" value
2. Adjustment control
3. Adjustment control
4. Servoamplifier
5. DC Servomotor
6. Tachogenerator
7. Incremental pulse generator

Figure 2.

# 2. Start-up

## 2.1 Cable connections on the axis control system and PRC 3

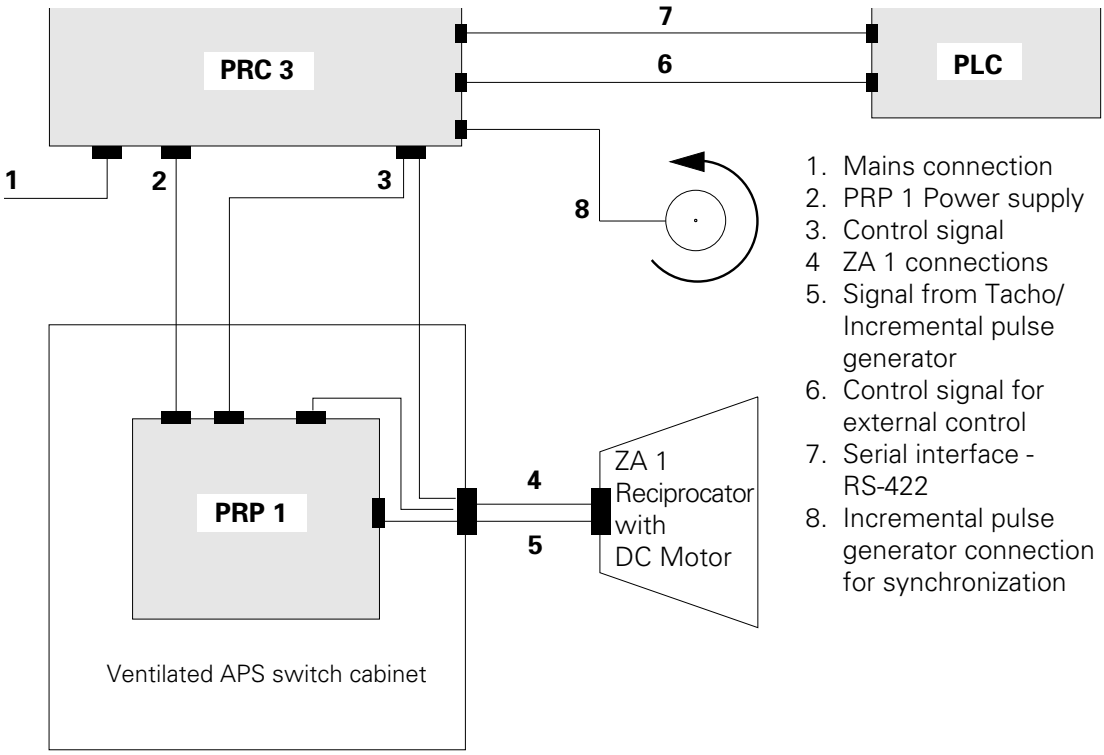


Figure 3.

(For further information see also PRP 1 Operating Instructions)

**Connections on the rear of the PRC 3**

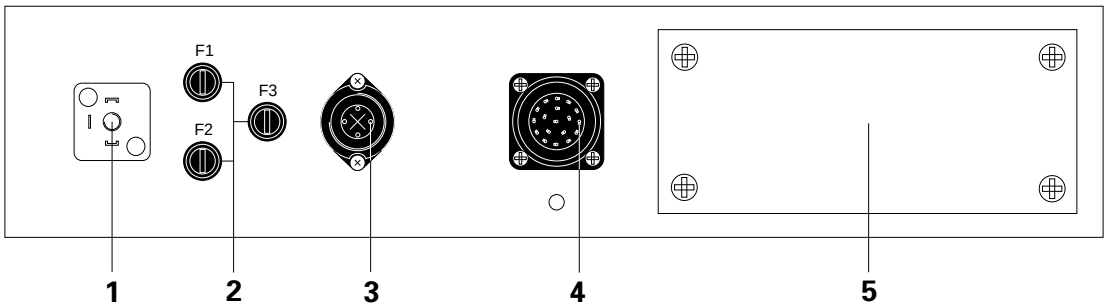


| | | | |
|---|---|---|---|
| 1 | Mains connection | 4 | Control signal - 18 pole socket |
| 2 | Fuse holders - F1, F2, and F3 | 5 | Cover plate for cable lead-throughs |
| 3 | Power pack - 4 pole socket | | |

Figure 4.

The cable connections have different plugs and cannot be wrongly connected on assembly.

| | |
|---|---|
| **ATTENTION! :** | **Before disconnecting the cables from the sockets always switch the equipment OFF at the Mains and disconnect the Mains cable!** |

Issued 01/97

## 2.2 Hardware versions of the PRC 3

The PRC 3 Powder Reciprocator Control is available as a Housing version for building into an APS 1 or APS 2, as well as a Rack version for the building into a switch cabinet.

### 2.2.1 PRC 3 - Housing version :

Front view:

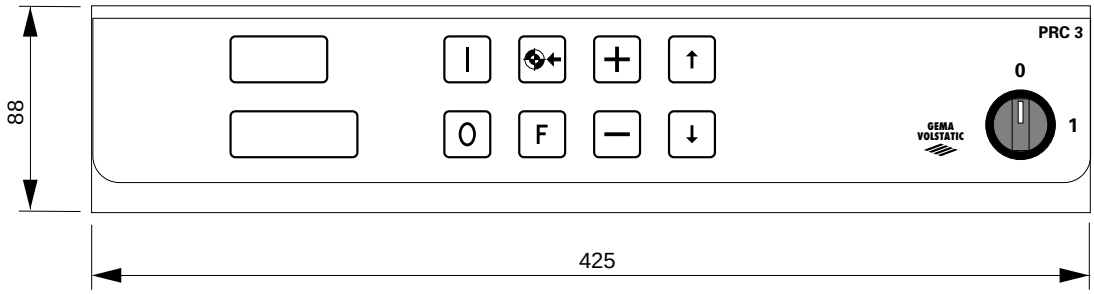


Rear view :

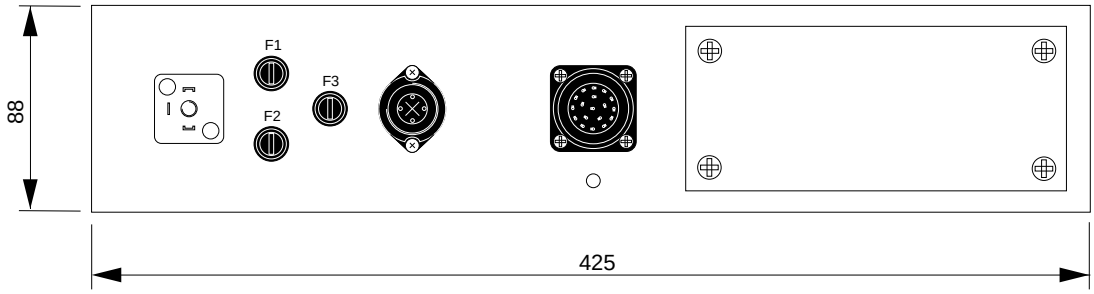


View from above :

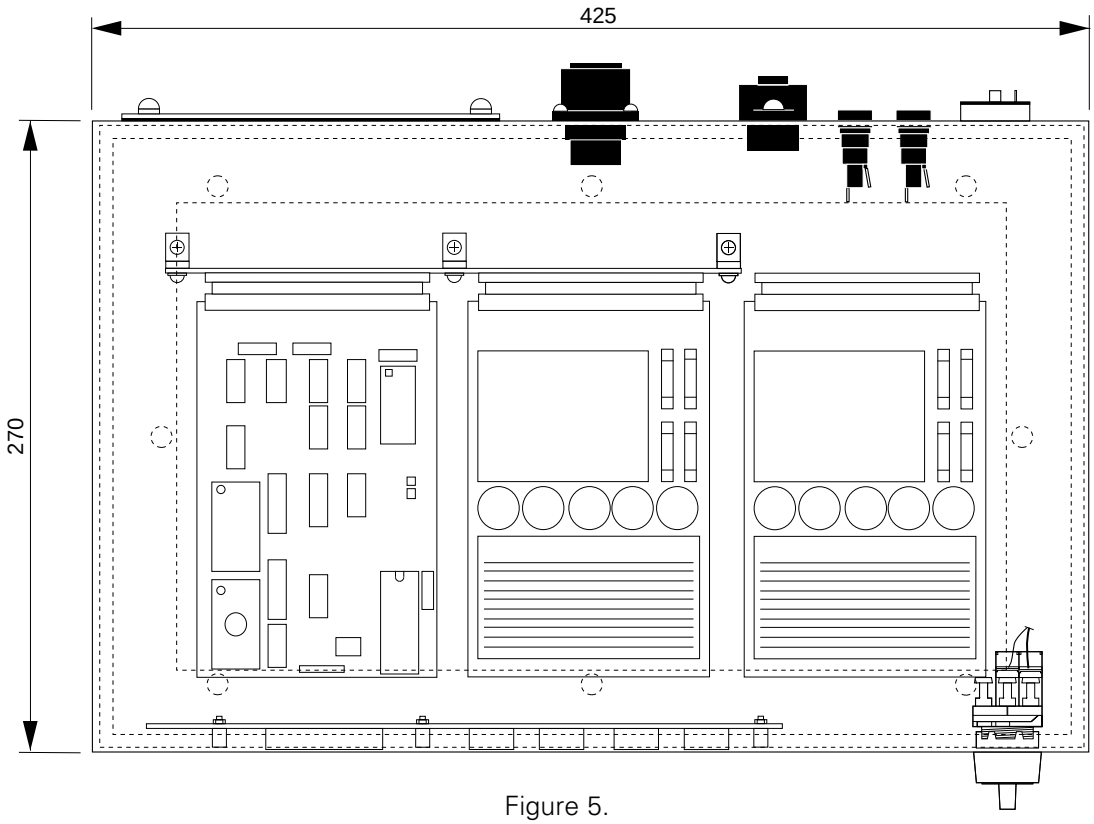


Figure 5.

### 2.2.2 PRC 3 - Rack version

The Rack version is based on a 19 inch Rack and is suitable for building into a switch cabinet for customer specific applications.

Front view :

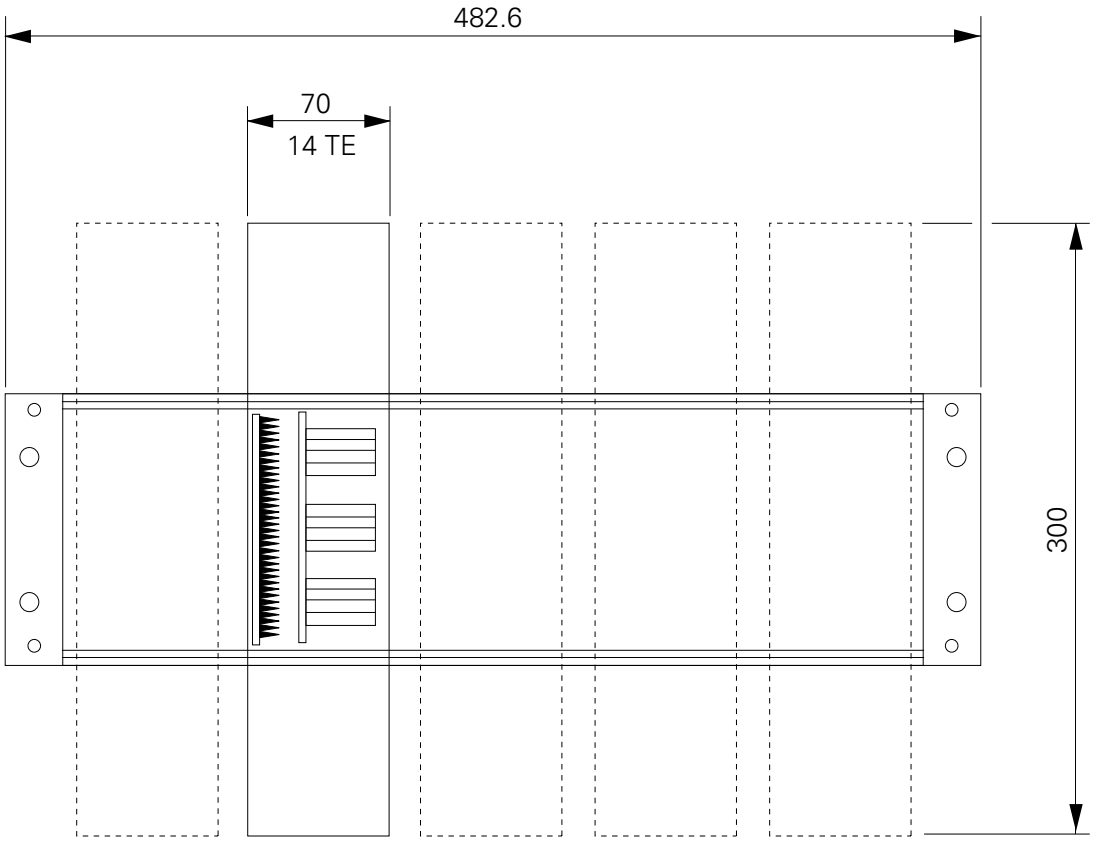


Figure 6.

A maximum of 5 PRC 3 Control units (Printed Circuit Board) can be built into a 19 inch Rack.
The display with keypad is built into the front of the switch cabinet and connected with the plug X9. A mounting frame is available for the Front display. The Front display version with the keypad is identical with the housing version.

Issued 01/97

### 2.2.3 Front display with mounting frame (Rack version)

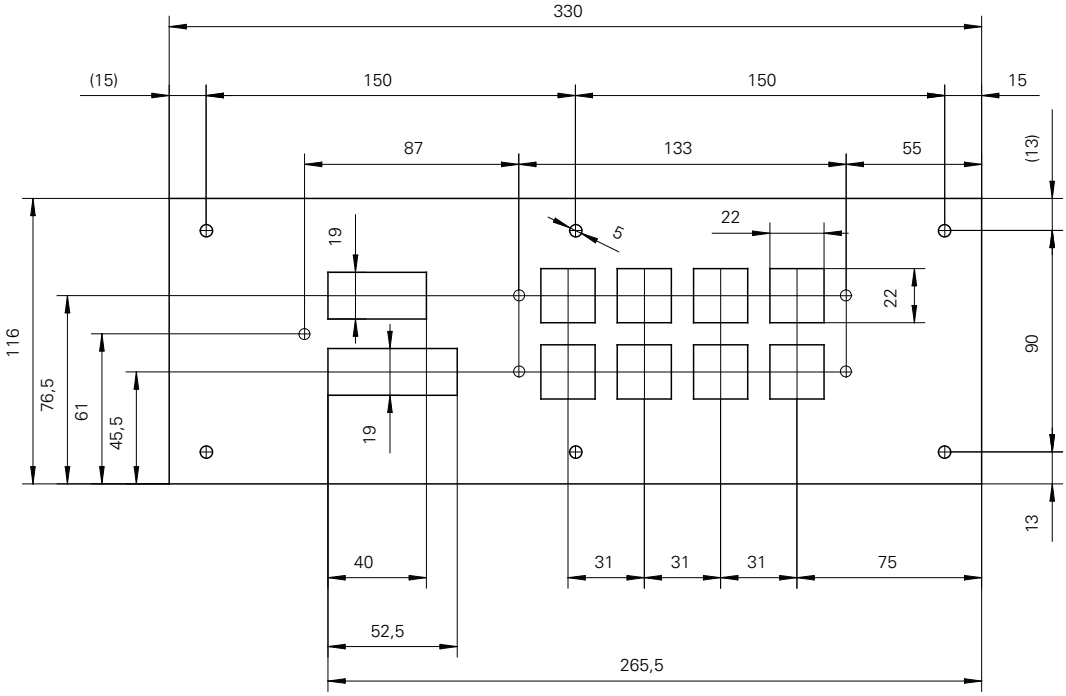


Cut-out in the front panel : 80 x 306 mm
Dimensions of the mounting frame : 116 x 330 mm

Figure 7

## 2.3 Selection of the Mains input voltage

Before the PRC 3 Powder Reciprocator Control is connected to the Mains, the built-in Mains section **must** be adapted to the available **Mains voltage**.

| | |
|---|---|
| **ATTENTION!** | **A voltage 10% or more over or under the nominal value can lead to malfunctioning or damage to the control electronics** |

Input voltage range : 100 V, 110 V, 120 V, 200 V, 220 V, 230 V, and 240 V

In order to set the Input voltage of the PRC, proceed as follows :

1. Disconnect all the electrical connections on the rear of the control unit and pull out the control unit.
2. Unscrew the quick-release screws on the cover of the control unit a half turn and remove the cover.
3. The connections and bridges on the 10 pole plug X1 on the Back plane must now be wired to correspond with the selected voltage.

(See Chapter 5.3 - Mains supply - POWER IN)

## 2.4 Setting the bridges on the control board (PCB) : DC operation only

The bridges on the control printed circuit board - Micro 3 are set at the factory. If the control printed circuit board - Micro 3 is replaced, the bridges must be checked and if necessary reconnected.

| | |
|---|---|
| **ATTENTION!** | **Incorrectly set bridges on the control printed circuit board - Micro 3 can lead to malfunctioning and/or damage to the equipment.** |

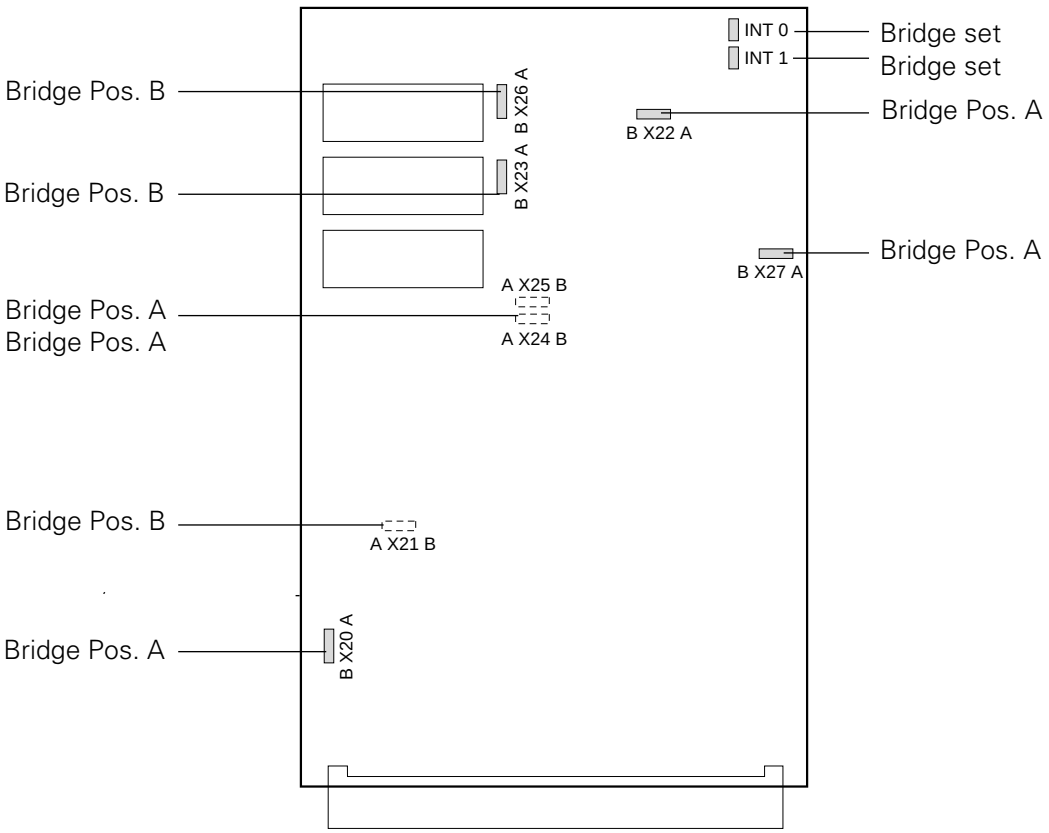


(see also Appendix D : MICRO 3 Configuration)

Figure 8.

## 2.5 Display and keypad fields

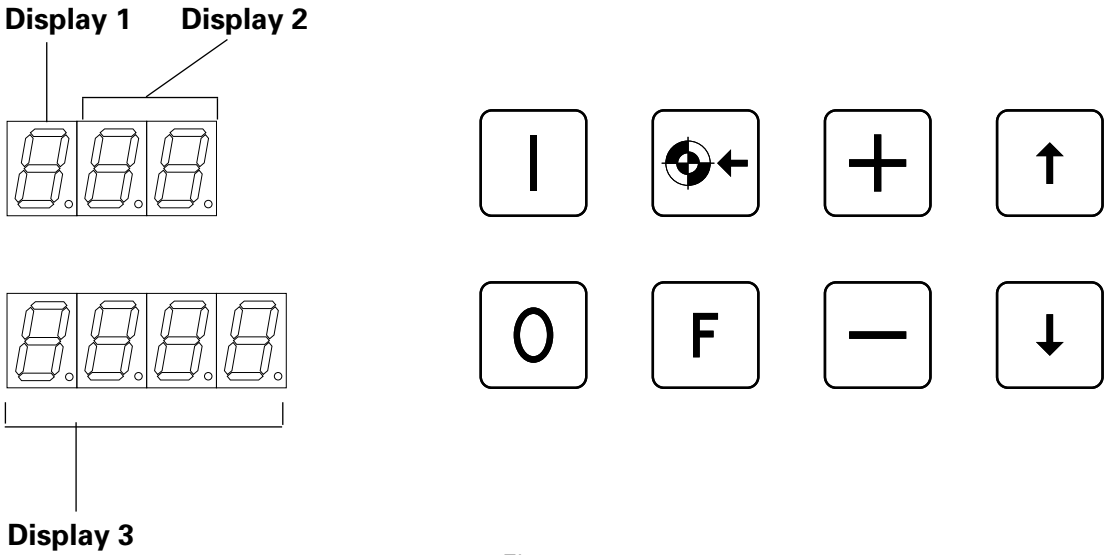


Figure 9.

| | |
|---|---|
| **Display field 1** | Symbol for the actual display |
| **Display field 2** | Shows the actual program number or system parameter number. |
| **Display field 3** | Position display or display of the input values |

## 2.6 Symbols on the display


Symbol for Program (active)


Symbol for Program (inactive)


Symbol for system parameter - EDIT

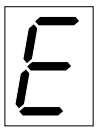
Symbol for error messages


Symbol for position

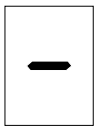
Symbol for the speed

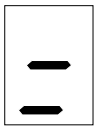
Symbol for relative speed (synchronization)

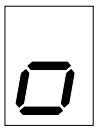
Symbol for dwell time


Symbol for Switching point 1 function output - Set / Reset


Symbol for Switching point 2 function output - Set / Reset


Next program address (next procedure step)

Figure 10.

## 2.7 Keypad symbols

| | | |
|---|---|---|
| I | Start | Axis "ON" |
| O | Stop | Axis "STOP" |
| | Reference point | Start - Travel to Reference point |
| F | Help Key<br>Error acknowledgement | acknowledge all errors except E10 |
| + | Increase value | |
| – | Decrease value | |
| ↑ | Select input parameter, program step selection - forwards | |
| ↓ | Select input parameter, program step selection - backwards | |

| | |
|---|---|
| **ATTENTION! :** | **The keypad should be operated with the fingers tips and under no circumstances with fingernails or hard objects!** |

Figure 11.

## 2.8 Keypad combinations

For key combinations the key [F] must be pressed first, then press the second key [F].

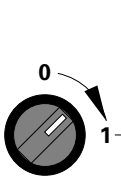


| | |
|---|---|
| [F] | RAM Reset (see exact description) |
| [0] | Software version (see exact description) |
| [↓] | Off-set compensation (with DC motors) (see exact description) |
| [F] [I] | Set-up mode - "ON" |
| [F] [0] | Set-up mode - "OFF" |
| [F] [+] | Parameter - "EDIT" - ON |
| [F] [–] | Parameter - "EDIT" - OFF |
| [F] [↑] | System parameter - "EDIT" - ON |
| [F] [↓] | Exit system parameter - EDIT |

Figure 12.

## 2.9 RAM Reset

1. Turn the Main switch of the PRC 3 - OFF
2. Press Function key [F] and turn the Main switch - ON.
3. The error message E11 appears on the display.
4. With the RAM Reset all data is written over with default values. Input values and stroke limit must be reset.

In order to set the stroke limit the keys [F] [↑] must be pressed simultaneously

See 2. 12 "Setting system parameters", page 15.

## 2.10 Checking the software version

1. Turn the Main switch of the PRC 3 "OFF"
2. Press the key [0] and turn the Main switch "ON".
3. The following appears on the display :

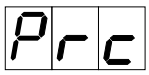



PRC _____ *Designation*

3. 05. 1

*1: for DC Reciprocator*

*Version number*

*PRC version*

## 2.11 Off-set compensation (for Gema-Volstatic Service personnel only)

The Off-set compensation is only effective with the DC Power pack (PRP 1).
Before setting the Off-set compensation the Operating Instructions of the PRP 1 Power pack must be consulted first.

Proceed as follows on the PRC 3 :

1. Set the Main switch of the PRC 3 to OFF
2. Hold the selection key [↓] down and switch the Main switch to ON.
3. The following appears on the display :

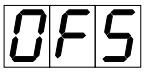



The PRP Off-set compensation can now be undertaken and is set correctly when the numbers remain on the lower display or only change slowly.

4. Off-set compensation is terminated with the function key [F] and the level is left.

## 2.12 Setting the system parameters

The PRC 3 is adapted to the type of reciprocator and the plant specific characteristics with the system parameters.

**System parameter settings for the reciprocator**

| Display | | Definitions | SPV | Default |
|---|---|---|---|---|
| S01 | SP1 | Upper stroke limit (m) | 0.1000-9.999 | 0.400 |
| S02 | SP2 | Reference point position (m) | 0.050-0.500 | 0.050 |
| S03 | SP3 | Increm. pulse gen. adjustment (Pulses/dm) | 1-9999 | 754 |
| S04 | SP4 | Maximum speed (m/s) | 0.001-0.600 | 0.600 |
| S05 | SP5 | Minimum speed (m/s) | 0.001-SP4 | 0.010 |
| S06 | SP6 | Acceleration ($m/s^2$) | 0.500 - 2.500 | 1.500 |
| S07 | SP7 | Circuit amplification (Factor) | 800 - 1500 | 1000 |
| S08 | SP8 | Alarm Input - OFF | 0 | 0 |
| | | - ON | 1 | |
| S09 | SP9 | Module addresses | 1-30 | 1 |

**System parameter adjustment for synchronization**

| Display | | Definitions | SPV | Default |
|---|---|---|---|---|
| S10 | SP10 | Increm. pulse gen. adjustment (Pulses/dm) | 1 - 9999 | 583 |
| S11 | SP11 | Circuit amplification (Factor) | 1 - 1500 | 1100 |
| S12 | SP12 | Conveyor cycle for PLC (mm) | 5 - 50 | 10 |

The system parameters are set to default values at the factory. On a RAM Reset the system parameters are loaded with default values.

**For reciprocators with a U-Axis**

When a U-Axis is used the system parameter SP3 Incremental pulse generator adjustment should be set to 1060.

| | |
|---|---|
| **ATTENTION!** | **Incorrect input of system parameters can lead to damage to the axes nd/or the booth.** |

Issued 01/97

### 2.12.1 System parameter 1 : Setting the upper stroke limit

When a Gema-Volstatic ZA 1 Reciprocator (with a DC motor) is operated with a PRC 3 Reciprocator control, all the system parameters are already set to the values for this axis.
The only system parameter which must be adjusted is the upper stroke limit.
The maximum stroke height (max. Travel) is limited by the upper stroke limit. The maximum stroke height is limited by the corresponding height of the reciprocator or the maximum height the gun slots in the booth.
The upper stroke limit of the PRC 3 Powder Reciprocator Control is always set at 0.800 m at the factory.

| | |
|---|---|
| **ATTENTION!** | **The maximum upper stroke limit must only be set to the height of the corresponding reciprocator. If an incorrect stroke limit (too high) is set, this can lead to damage to the reciprocator and/or the booth!** |

In order to set the upper stroke limit (System parameter 1), proceed as follows :

1. Position the reciprocator at the booth and connect the PRC 3 Powder Reciprocator Control (see Cable connections - page 3).

2. Switch on the PRC 3 Powder Reciprocator Control with the Main switch.

   The following appears on the display :

   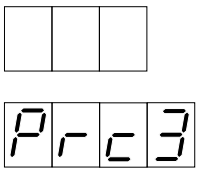
   

3. Press any key.

   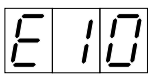
   

   The following appears on the display :

   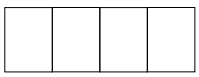

4. Press keys [F] and [↑] simultaneously for approximately 3 seconds.

   The PRC 3 Powder Reciprocator Control switches to the level

   "System parameter - EDIT".

   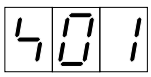
   

   The following appears on the display :

   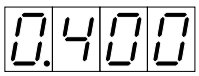
   

   (Default value)

5. The upper stroke limit can be set with the keys [+] and [−].

6. If the other system parameters must be edited, these can be selected with the key [↑] or [↓].

7. Press the two keys, [F] and [↓] simultaneously.

   The PRC 3 Powder Reciprocator Control exits from the system parameter "Upper stroke limit".

   The following appears on the display:

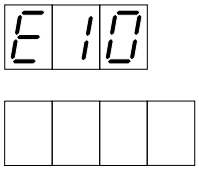


The "Travel to Reference point" [⊕←] must restarted.

If the system parameters must be changed, fill in the actual values in the corresponding table in Appendix B.

| | |
|---|---|
| **ATTENTION!** | **Incorrect inputs can lead to damage to the reciprocator and/or the booth!** |

### 2.12.2 System parameter 2 : Reference point

The Reference point of the reciprocators is **always** 50 mm **above** the Zero point. The Reference point should be adjusted to the lowest position of the gun slots of the booth, and the lower reversing point of the reciprocator stroke (according to the application). *When displacing the proximity switch, the Zero point is also displaced.* For most applications it is not necessary to displace the Proximity switch.
**If the Zero point must be displaced, this should only be in the *upward* direction.**
The travel position can be freely selected between the upper stroke limit, and the Zero point.

| | |
|---|---|
| **ATTENTION !** | **The displacement of the proximity switch upwards shortens the stroke. This change must be taken into account when setting the upper stroke limit without exception!** |

| | |
|---|---|
| **ATTENTION!** | **Displacing the proximity switch can lead to damage to the reciprocator and/or the booth! Before any displacement of the proximity switch is undertaken, please contact a Gema-Volstatic service centre!** |

Reference point and Zero point

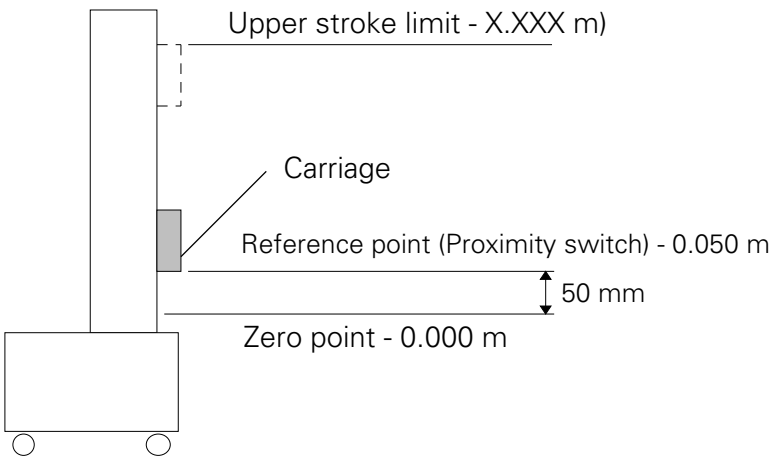


The "Travel to Reference point" command is given with the key .

Figure 13.

# 3. Programming the PRC 3

The operating software of the PRC 3 is set out for the user in 5 programming levels.

These are :

- STOP
- START
- EDIT
- SET UP
- SYSTEM PARAMETER

Each of these program levels has exactly defined functions.
The individual program levels can be selected with a single key or a key combination.

The structure in the form of a syntax diagram is graphically illustrated on the following pages. A careful study of this diagram will greatly help in under-standing the programming steps.

Issued 01/97

## Syntax diagram of the programming levels

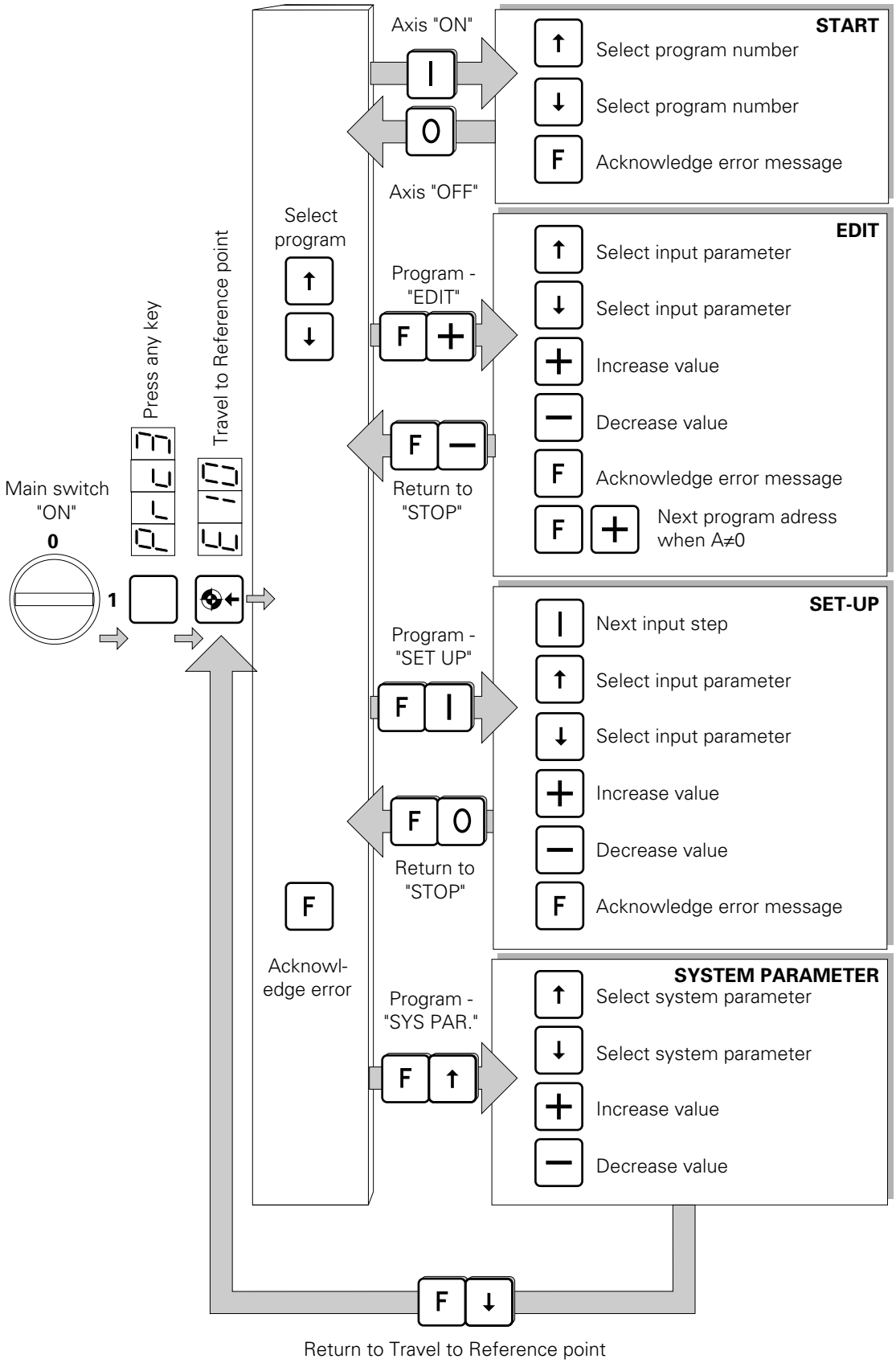


Figure 14.

## 3.1 Programming levels

### 3.1.1 START

After switching on the Main switch "*PRC3*" appears on the display. When any key is pressed the message "*E10*" appears on the display and the "Travel to Reference point" command can be given.
Afterwards the "Travel to Reference point" is automatically switched to the level "STOP". The desired program can now be selected. The levels "START, EDIT, SET UP or SYSTEM PARAMETER" can be entered from the level "STOP".

START
Pressing the key [ I ] switches to the level "START" and the selected procedure is activated. In the level "START" the program number can be selected when the reciprocator is running. The reciprocator can be stopped again by pressing the key [ 0 ]. The program switches automatically to the level "STOP".

### 3.1.2 EDIT

Pressing the key combination [F][+] switches from the level "STOP" to the level EDIT.
In this program level the following functions are available :

- Select the procedure parameter with the keys [↑] and [↓].
- Parameter values are increased with the key [+] and decreased with the key [−].
- The maximum value of the preselected input parameters can be set with the key [I].
- The minimum value of the preselected input parameters can be set with the key [0].
- Error messages are acknowledged with the key [F].
- Switching to the next step in a program step chain (when A ≠ O) is done with the key combination [F][+]. If there is no following step (A = O) then "END“ appears on the display.

To enter the program level "STOP" the key combination [F][−] must be pressed.

### 3.1.3 SET UP

In this program level the procedure positions can be approached step by step and edited. The procedure positions can be directly taken from the object to be coated in a Teach-In procedure.

Changing from the level "STOP" to the level SET UP is done by using the key combination [F][I]. The axis travels directly to the first, actual displayed position.

The following functions are available :

- Start the next procedure step with [I].

  If there is no further step (A ≠ O) "END" appears on the display
- Select the procedure parameter with the keys [I] and [↓].
- The parameter values are increased with the key [+] and decreased with the key [−]. The axis carries out the corrections simultaneously as they were input.
- Acknowledge error messages with the key [F].

In order to enter the program level "STOP" again press the key combination [F][0].

### 3.1.4 SYSTEM PARAMETER

Switching to the level "EDIT" to edit the system parameter is done with the key combination [F][↑]. The desired system parameter can be selected with the keys [↑] and [↓] and are increased with the key [+] or decreased with the key [−].

To exit from the level "SYSTEM PARAMETER" the key combination [F][↓] is used.

In order to enter the level "STOP", the Reference point must be approached again by pressing the key [⊕←].

## 3.2 Structure of a program step (Procedure step)

A program step consists of the following Parameters :

| *Display* | *Designation* | *Input range* |
|---|---|---|
| U | Procedure position | 0.00 -9.999 m |
| – | Speed | 0.005-0.600 m/s |
| – – | Relative speed<br>(only for synchronization) | -0.600 / +0.600 m/s |
| o | Dwell time<br>(in the procedure position) | 00.0-60.0 sec |
| F | Switching point 1 function output<br>(loop counter, gun control) | *Set* *Set*<br>1.000 - 1.999 *Switching*<br>0.000 - 0.999 *positions*<br>*Reset* |
| 7 | Switching point 2 function output<br>(loop counter, gun control) | *Set* *Set*<br>1.000 - 1.999 *Switching*<br>0.000 - 0.999 *positions*<br>*Reset* |
| A | Program addresses<br>(for following step) | 1-64: Program addresses<br>0: No further program step |

A user program can consist of a single program step when only one position is to be approached.

By joining a number of program steps a program sequence is created.
The program steps are then processed in a certain order.

See 3.3 Programming examples, page 26.

### 3.2.1 Program parameters on the display

Display : U01 — Symbol for Position and Program step number

2.000 — Desired Position

Display : -01 — Symbol for Speed and Program step number

0.200 — Desired Speed

Display : =01 — Symbol for Relative speed and Program step number

0.000 — Desired Relative speed

Display : o01 — Symbol for Dwell time and Program step number

00.0 — Desired Dwell time in seconds

Display : F01 — Symbol for Switching point 1 function output and Program step number

1.100 — Switch condition of the Function outputs O/I

Switching position of the function output

Display : 701 — Symbol for Switching point 2 function output and Program step number

0.100 — Switch condition of the function outputs O/I

Switching position of the function output

Display : A01 — Symbol for Program address and Program number

0002 — Desired Program step address

Issued 01/97

## 3.3 Programming examples :

### 3.3.1 Positioning example

| *Display:* | | *Input value:* |
|---|---|---|
| U | = | 1.000 m |
| - | = | 0.100 m/s |
| - | = | 0.00 m/s |
| o | = | 00.0 sec |
| F | = | 0.000 |
| 7 | = | 0.000 |
| A | = | 0000 Address |

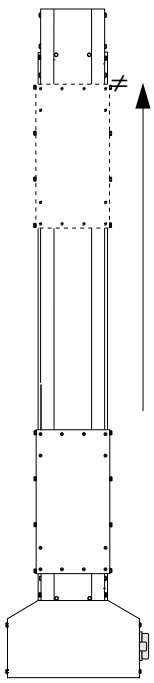


*Stop at position = 1,000 m*

*Procedure speed V* = 0.100 m/s

*Start in Output position*

Figure 15.

### 3.3.2 Example for oscillating movements

| Program 1 Display | Input value | Program 2 Display | Input value |
|---|---|---|---|
| U | = 0.010 m | U | = 2.000 m |
| – | = 0.200 m/s | – | = 0.100 m/s |
| – | = 0.000 m/s | – | = 0.000 m/s |
| o | = 00.0 sec | o | = 00.0 sec |
| F | = 0.000 | F | = 0.000 |
| 7 | = 0.000 | 7 | = 0.000 |
| A | = 0002 Address (Following address Program step 2) | A | = 0001 Address (Following address Program step 1) |

*Approaching of the reversing position*

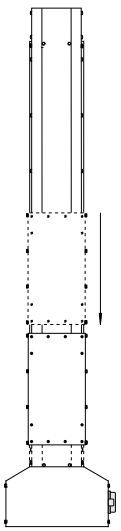

Start Prog. step 1

V = 0.2 m/s

Position = 0.010 m

*Program 1 / Program 2*

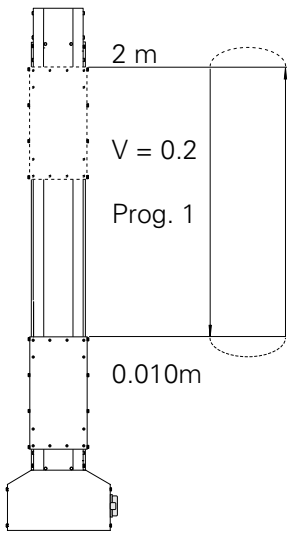


Figure 16.

### 3.3.3 Travel/Time diagram - Example :

| | P1 | P2 | P3 | P4 | P5 |
|---|---|---|---|---|---|
| U | 1.000 | 2.500 | 1.500 | 3.500 | 1.000 |
| – | 0.250 | 0.500 | 0.200 | 0.400 | 0.500 |
| – | 0000 | 0000 | 0000 | 0000 | 0000 |
| o | 0.0 | 3.0 | 2.0 | 0.0 | 0.0 |
| F | 0.000 | 1.000 | 1.000 | 1.000 | 0.000 |
| 7 | 0.000 | 1.000 | 1.000 | 1.000 | 0.000 |
| A | 0002 | 0003 | 0004 | 0005 | 0002 |

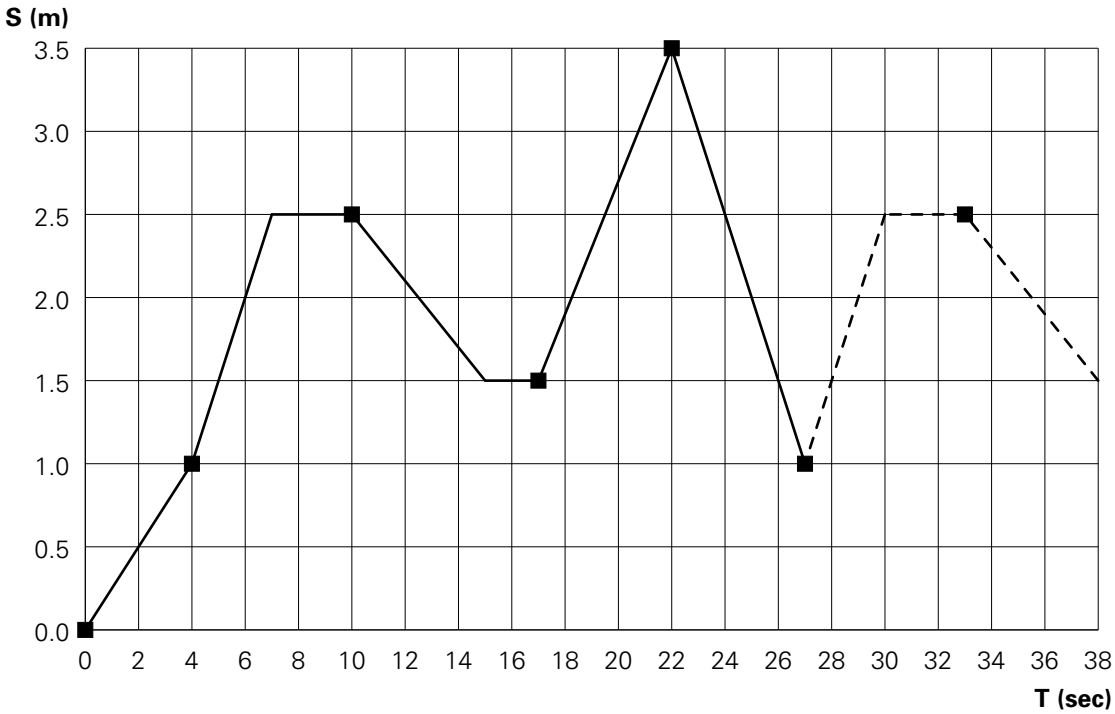


Function output (F) (Loop counter, Gun control)

Program P1 : Start position program sequence
Program P2 - P5 : Program sequence

Figure 17.

### 3.3.4 Using the function outputs

The function output can be set and reset in a program (procedure step) with two switching points. The switching position of the first switching point can be selected between 0 and 999 mm, after entering the respective program. The switching position of the second switching point can be selected between 0 and 999 mm, before the end of the respective program.

Example :

| | |
|---|---|
| F01 | Switching point 1 of program 1 |
| 1.100 | In program 1 the function output is set to 1 (High) after 100 mm |
| 701 | Switching point 2 of program 1 |
| 0.500 | 500 mm before program 1 is finished the function output is set to 0 (Low) |


Figure 18.

## 3.4 Program switching

Program switching can be carried out through the keypad (manually) or through an external control signal.

If a program switch takes place when the axis is moving, the axis does not stop but immediately carries out the new program step.
When changing speed the acceleration development (Ramp) is taken into account.

If a program change is initiated during an acceleration or braking phase, then the acceleration/deceleration ramp development of the old program step is completed before the ramp of the following program is carried out.
The display of the actual program number is immediately updated.

## 3.5 Continuous

So that a program sequence, consisting of a number of program steps, can be started in a continuous sequence a minimum distance must be maintained between the procedure positions dependent on the procedure speed.

If two procedure positions are too close together, the maximum procedure speed cannot be reached.

The continuous movement sequence will therefore be terminated and N.CO. (No Continuous) appears on the display.

To calculate the minimum distance - ΔS between two consecutive procedure positions S1, and S2, the following is formula valid :

$$\Delta S = S2 - S1 \geq \frac{V2^2}{a}$$

*Example :* Acceleration $a = 1.5\ m/s^2$ (System parameter - SP 6)

Program step P1 : V1 = 0.2 m/s
S1 = 1.000 m

Program step P2 : V2 = 0.4 m/s
S2 = 1.008 m

$\Delta S = S2 - S1 = 1.008\ m - 1.000 = 0.008\ m$

$$\frac{V2^2}{a} = \frac{(0.4\ m/s)^2}{1.5\ m/s^2} = \frac{0.16\ m^2/s^2}{1.5\ m/s^2} = 0.107\ m$$

$\Delta S < \frac{V2^2}{a}$ —> **Continuous is not possible**

**Continuous is possible** for S2 > 0.107 m

Issued 01/97

Continuous is possible

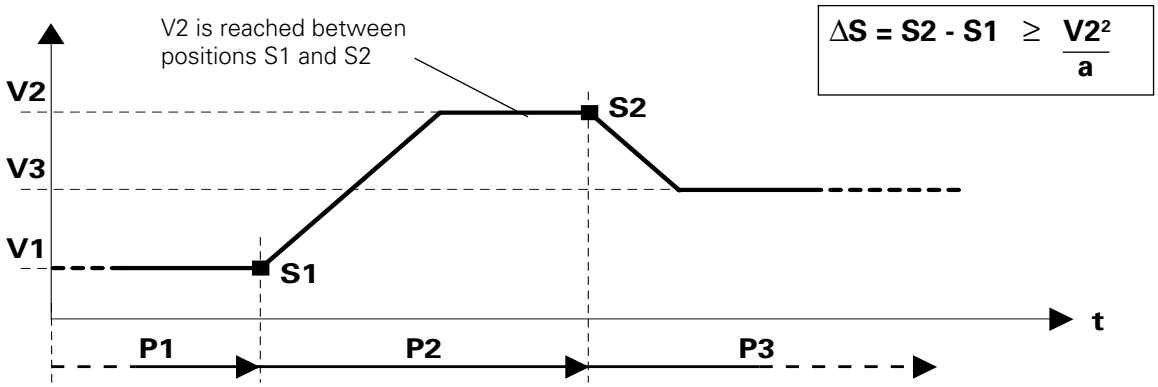


Continuous is *not* possible

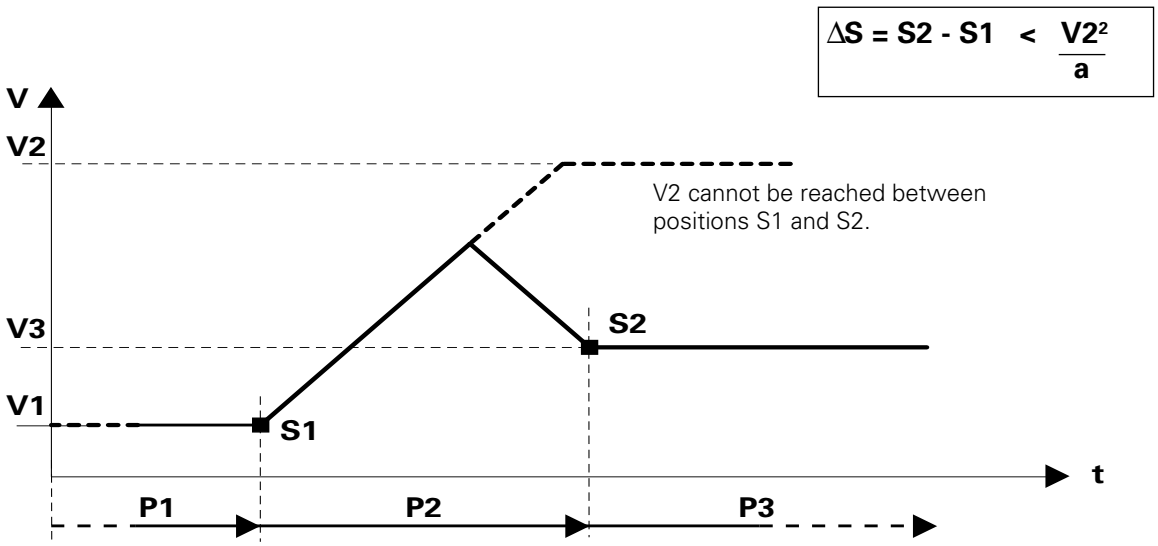


V2 cannot be reached between the positions S1 and S2.
The movement sequence cannot be carried out continuously.

During P2 n.CO (no Continuous ) appears on the display.

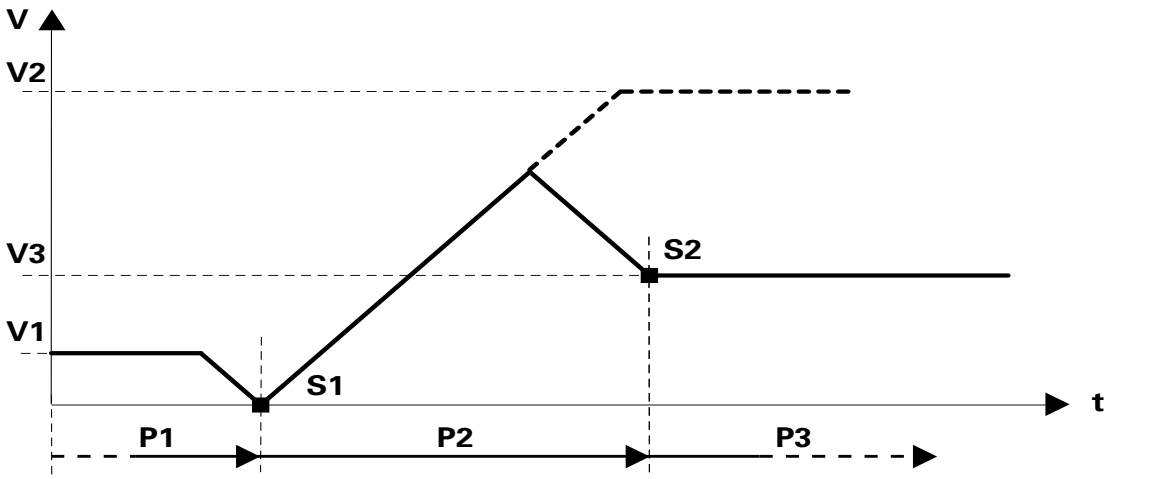


Figure 19.

# 4. Automatic operation through an external control

## 4.1 Function

The function the PRC 3 can be activated by digital control signals from an external control unit.

Switching from manual operation, with the keypad, to automatic control through the digital inputs and outputs by occupying one of these inputs. After successful switching input through the keypad is locked.

The keypad is deactivated with the exception of error acknowledgement through key F.

## 4.2 Switching from Manual to Automatic

Switching between manual and automatic operation is initiated with the control signal - MAN/AUTO.

MAN/AUTO : High —> Automatic

MAN/AUTO : Low —> Manual

Issued 01/97

## 4.3 Travel to Reference point with external control

The Travel to Reference point command of the not yet referenced axis is released by the digital input - START REF on logical - High.

If the axis is already referenced can be determined with the digital output - ERROR REF.

ERROR REF : High —> Axis is referenced

ERROR REF : Low —> Axis is not yet referenced

## 4.4 Program selection with an external control

For the selection of a program number, 6 digital inputs ($2^0$, $2^1$, $2^2$, $2^3$, $2^4$, $2^5$) are available.

All program numbers are binary coded (64 possibilities).

The code set out below corresponds to the desired program numbers.

Relationship of the Binary code and Program numbers

| $2^5$ | $2^4$ | $2^3$ | $2^2$ | $2^1$ | $2^0$ | Prog. No |
|---|---|---|---|---|---|---|
| 0 | 0 | 0 | 0 | 0 | 0 | 64 |
| 0 | 0 | 0 | 0 | 0 | 1 | 1 |
| 0 | 0 | 0 | 0 | 1 | 0 | 2 |
| 0 | 0 | 0 | 0 | 1 | 1 | 3 |
| 0 | 0 | 0 | 1 | 0 | 0 | 4 |
| 0 | 0 | 0 | 1 | 0 | 1 | 5 |
| 0 | 0 | 0 | 1 | 1 | 0 | 6 |
| 0 | 0 | 0 | 1 | 1 | 1 | 7 |
| 0 | 0 | 1 | 0 | 0 | 0 | 8 |
| = | = | = | = | = | = | = |
| - | - | - | - | - | - | - |
| = | = | = | = | = | = | = |
| 1 | 1 | 1 | 1 | 1 | 1 | 63 |

The code (set out on the previous page) for the program number is read-in and activated by the negative flank of the control signal - STROB.
For program switching the following time sequence must be taken into account :

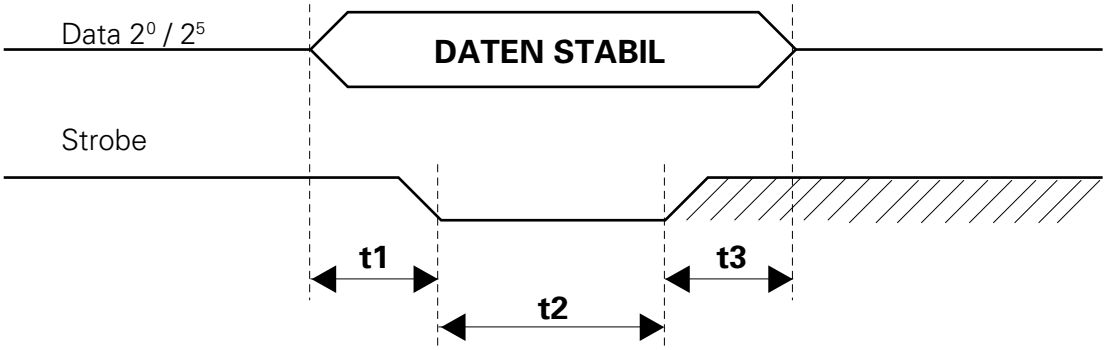


| | | |
|---|---|---|
| t1 | Preparation time : | Minimum 0,5 ms |
| t2 | Signal duration : | Minimum 1,0 ms |
| t3 | Braking time : | Minimum 0 ms |

Figure 20.

## 4.5 START and STOP with an external control

The actual program can be started or stopped by the digital inputs START/STOP-URP and START/STOP-LRP.

The stop position can be controlled with this combination :

LRP : Lower reversing point
URP : Upper reversing point

| START/STOP-URP | START/STOP-LRP | Function |
|---|---|---|
| 0 | 0 | Axis is stopped |
| 1 | 1 | Axis is started |
| 1 | 0 | Axis is started, and stopped at the upper reversing point |
| 0 | 1 | Axis is started, and stopped at the lower reversing point |

STOP URP and STOP LRP are carried out when the actual sequence program forms a closed program loop.

The upper and lower reversing points are defined as follows :

LRP : Lowest position of the program loop.
URP : Highest position of the program loop.

## 4.6 Alarm Input

The motor is detached from the Power pack (PRP 1) and immediately switched to the axis brake by the digital alarm input - EMERGENCY STOP from the PRC 3 Control unit.
This function can be released by the system parameter - SP 8.

EMERGENCY STOP : Low —> Axis locked, error message - E09
EMERGENCY STOP : High —> Normal operation

| | |
|---|---|
| **Important :** | **This input must *not* be used as an Emergency Stop for personnel protection as this function is operated through the electronics (EN 60 20 4) by the software.** |

## 4.7 Function output

The digital output - FUNCTION OUT can set or unset the procedure program.

The switch condition corresponds with the program parameter value - F of the active program step.

Program parameter - F = O —> FUNCTION OUT = High
Program parameter - F = 1 —> FUNCTION OUT = Low

## 4.8 "Program run" signal

If the axis is moving can be determined through the digital output - "PROGRAM RUN".

When a program is started the digital output - PROGRAM RUN is active (High). It remains active as long as the actual program has no further following program, and its dwell time has not yet run out. As soon as the last position is reached, and the dwell time has run out the output - PROGRAM RUN is inactive (Low).

**PROGRAM RUN** = Low —> - Axis is stopped
- Travel to Reference point
- Set-up operation

A program is started which does not have a following program or a dwell time, and the actual axis position is the same as the program position.

**PROGRAM RUN** = High —> - Axis is started
A program is started which does not have a following program, but has a dwell time, and the actual axis position is the same as the program position. When the dwell time has run out, the output - PROGRAM RUN is erased.

Issued 01/97

## 4.9 Collective error messages

The digital output "GENERAL ERROR" signals by means of a Low on the output that the axis control is in EDIT, SYSTEM PARAMETER or STEP mode. It also gives the following error messages :

E07 : Time out error (only possible with serial interface)

E08 : EPROM is wrongly "burnt-in" (Check sum error)

E09: EMERGENCY STOP is released

E11: RAM Reset is carried out

E12: Data loss (Check sum error)

E20: Software end stop overrun

E21: Positioning error too great

E22: Tachogenerator error

E24 : Incremental pulse generator error
Cable broken - signal A or B, or A and B

E25 : Direction of rotation error
Incremental pulse generator signals A and B reversed

GENERAL ERROR : Low —> An error exists

GENERAL ERROR : High —> Normal operation

(See also Chapter 7 - Error messages)

## 4.10 Teach-In Mode

As soon as the digital input - Teach In (Start Ref.), in the Stop mode in automatic operation, is activated (High), the PRC Module switches to the Teach In mode. The Address channels - $P2^0$ to $P2^5$ are read in with the Strobe signal. The PRC then carries out a program switch and travels, at a minimal speed (for safety reasons), to the programmed position. When the axis has reached this position (Program Run - Low), it is maintained and the axis position can now be changed with the digital inputs - Increment Position (Stop/Start URP) and Decrement Position (Stop/Start LRP). The position value is always monitored and stored in the PRC, thereby. Any new program can now be selected, as desired. Finally, the positions can be read through the serial interface (See Interface description - Reading Data Blocks).

| PLC | PRC Module |
|---|---|
| | Stop mode (Automatic operation) |
| Teach In — > High | |
| | Teach In Mode |
| Addresses at $P2^0$ to $P2^5$ on Strobe | |
| | Switch program<br>Program Run —> High<br>Axis travels to defined position<br>Program Run —> Low |
| Increment / Decrement Position | |
| | Position value larger/smaller<br>Axis travels to new position |
| Teach In —> Low | |
| | Stop Mode (Automatic Operation) |

# 5. Connections and plug assignment

The PRC 3 axis control is available in two Hardware versions.
The standard version of the PRC 3 axis control is supplied as a drawer unit.
The second version does not have a housing and can be directly built into a Rack mounting in the switch cabinet.
In both versions the external control signal can be connected to the Back plane (BP 1 for the housing version / BP 2 for the switch cabinet).

## 5.1 Housing version

Connections on BP 1 (Housing version):

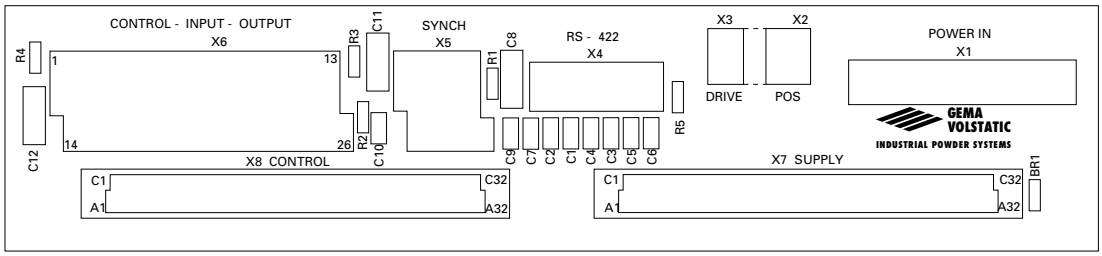


*Key to the PCB :*

1 **X1** : Power supply (POWER IN)
2 **X2** : Position determination (POS)
3 **X3** : Drive signal (DRIVE)
4 **X4** : RS 422 Serial interface (SINEC-L1)
5 **X5** : Synchronization (SYNCH)
6 **X6** : External control signal (CONTROL - INPUT - OUTPUT)

Figure 21.

## 5.2 Mounting in a switch cabinet

Connections on BP 2 (for the switch cabinet)

Control printed circuit board is mounted vertically in the switch cabinet :

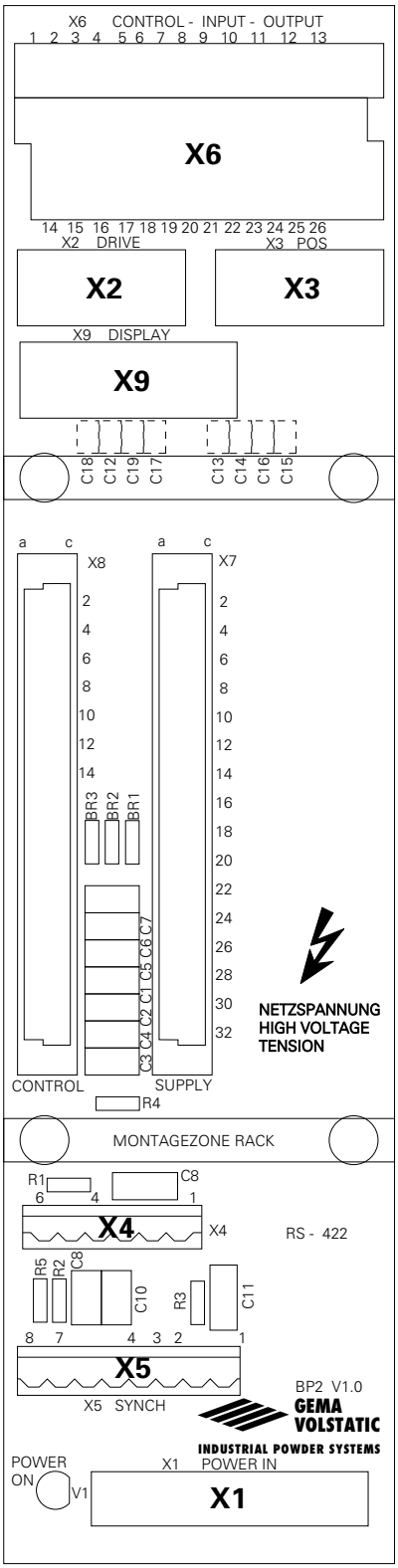


**X1** : Power supply (POWER IN)
**X2** : Drive signal (DRIVE)
**X3** : Position determination (POS)
**X4** : RS 422 Serial interface (SINEC-L1)
**X5** : Synchronization (SYNCH)
**X6** : External control signal (CONTROL-INPUT-OUTPUT)
**X9** : Display connections (DISPLAY)

Figure 22.

## 5.3 Mains supply - POWER IN (BP1 -, BP2 - X1)

The plug assignment for the power supply is identical for both Hardware versions. The fuse protection for the Control section and Power pack is already available on the Housing version only.
On the Rack version the fuse protection must be made by the customer analogue to the wiring diagram of the Housing version, with corresponding fuse values from F1 to F3.

| **X1 POWER IN** BACK PLANE X1 | | | | **POWER SUPPLY** | | | |
|---|---|---|---|---|---|---|---|
| **Mains** | **N** | **P** | **Bridges - X1** | **BR1** | **BR2** | **BR3** | **BR4** |
| 100 | 2 | 4 | 3-8 / 5-9 | ON | OFF | ON | OFF |
| 110 | 2 | 4 | 3-8 / 5-9 | OFF | ON | OFF | ON |
| 120 | 2 | 6 | 7-10 / 3-8 | OFF | ON | OFF | ON |
| 200 | 2 | 9 | 4-8 | ON | OFF | ON | OFF |
| 220 | 2 | 9 | 4-8 | OFF | ON | OFF | ON |
| 230 | 2 | 9 | 6-8 | OFF | ON | OFF | ON |
| 240 | 2 | 10 | 6-8 | OFF | ON | OFF | ON |

Grounded lead connection PE X1.1

Example : for 220 V Mains voltage

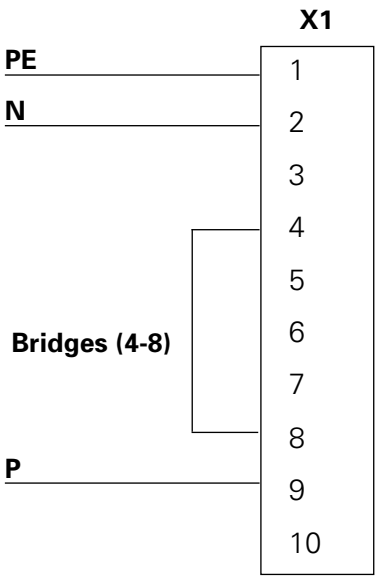


The bridges, BR 1 to BR 4, on the printed circuit board - POWER SUPPLY are set as follows :

BR 1 = OFF
BR 2 = ON
BR 3 = OFF
BR 4 = ON

## 5.4 External digital control signal (CONTROL-INPUT-OUTPUT)

The plug and the pin assignment for the digital control unit and control signal is identical on both Hardware versions :

| | | |
|---|---|---|
| Housing version : | Back plane - BP 1 | Plug X6 |
| Rack version : | Back plane - BP 2 | Plug X6 |

*Plug occupation X6 CONTROL-INPUT-OUTPUT*

| INPUT | |
|---|---|
| 1 | Shield input cable |
| 2 | GND for input (24 V) |
| 3 | Prog. $2^0$ |
| 4 | Prog. $2^1$ |
| 5 | Prog. $2^2$ |
| 6 | Prog. $2^3$ |
| 7 | Prog. $2^4$ |
| 8 | Prog. $2^5$ |
| 9 | Strobe |
| 10 | Start Ref. (Teach-In*****) |
| 11 | Start / Stop - URP (Increment Position*****) |
| 12 | Start / Stop - LRP (Decrement Position*****) |
| 13 | Sync - ON |
| 24 | Emergency Stop |
| 25 | Man. / Auto. |
| 26 | Address Init. |
| OUTPUT | |
| 14 | Shield output - Cable |
| 15 | +24 V for output |
| 16 | Conveyor Clock |
| 17 | Clock Sign |
| 18 | Function - Out |
| 19 | Axis in motion |
| 20 | Error summary |
| 21 | Error Ref. |

***** Double function for Teach-In Mode

Issued 01/97

### 5.4.1 Digital inputs and outputs

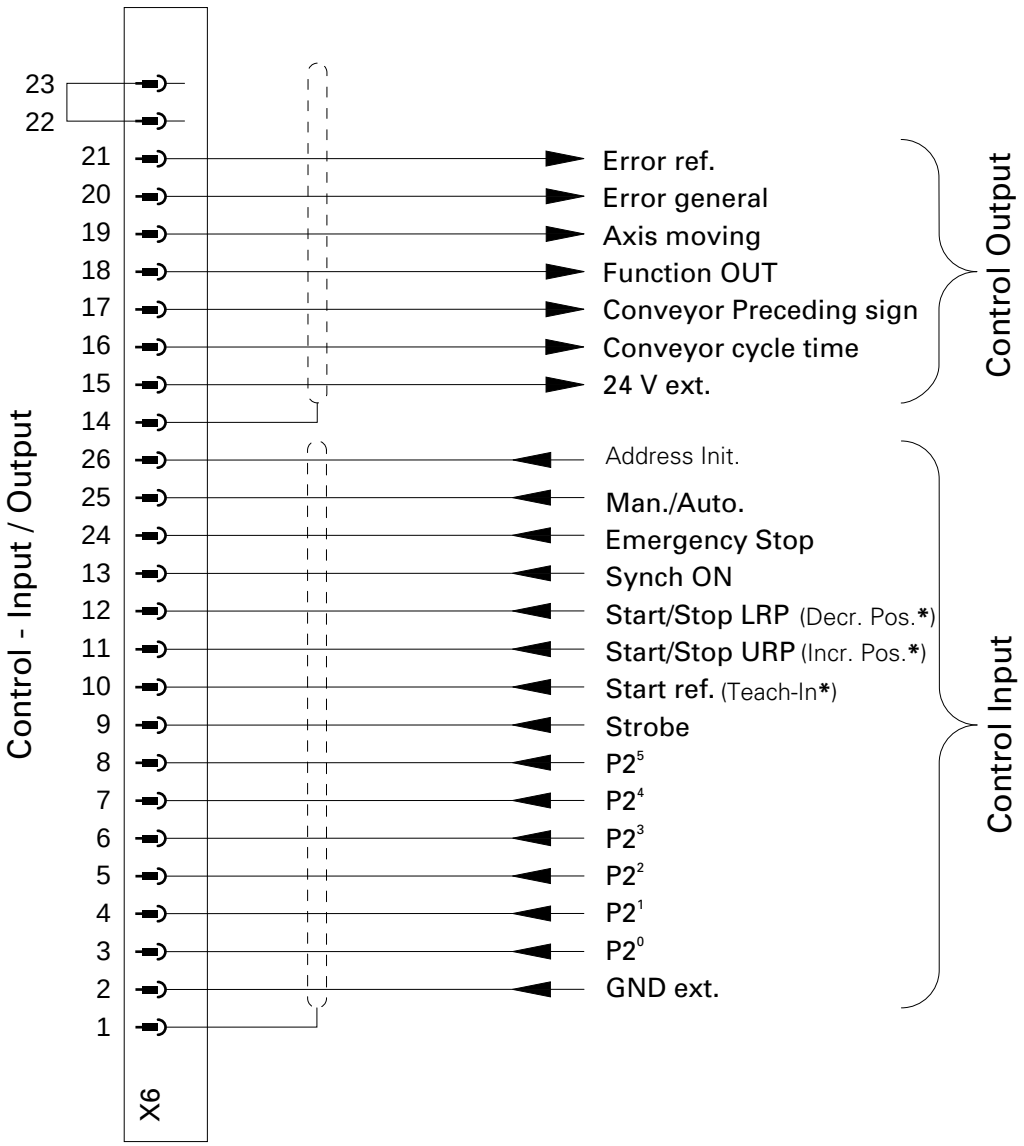


***** Double function for Teach-In Mode

Figure 23.

### 5.4.2 Electrical connections for digital outputs

The digital outputs are set out for operation at 24 VDC and function as galvanically isolated PNP outputs.

Connection example :

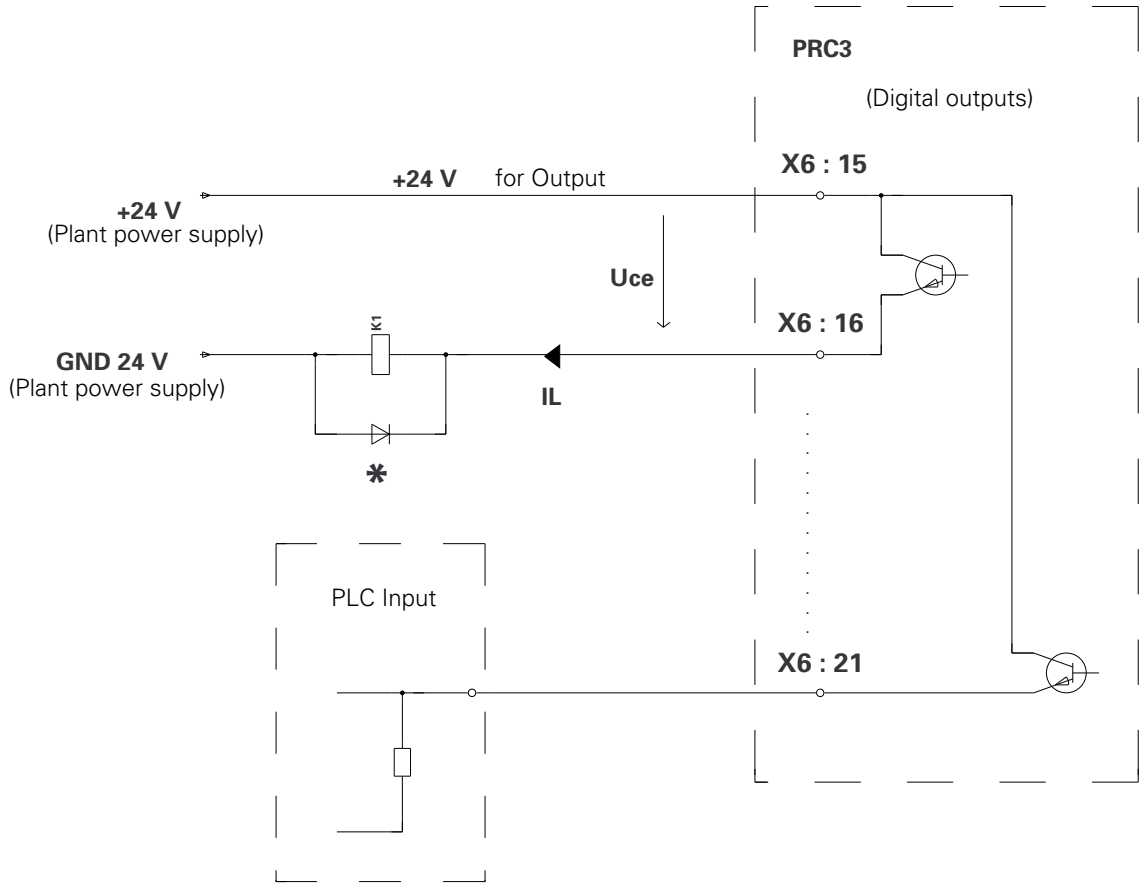


Technical data for the digital outputs :

| | |
|---|---|
| Maximum Collector-Emitter voltage : | $U_{CE}$ max. = 35 V |
| | $-U_{CE}$ max. = 6 V |
| Maximum ballast current : | $I_L$ max. = 30 mA |
| Maximum residual voltage through the switched output at maximum ballast current : | $U_{CEsat}$ max. = 1.1 V |
| Maximum residual voltage with inhibited output : | $I_{CE0}$ max. = 500 µA |

| | |
|---|---|
| **Important!** | ***Inductive loads must be switched with a recovery diode.** |

Example : A Type 1N4004 Silicon diode or similar

Figure 24.

### 5.4.3 Electrical connection for a digital input

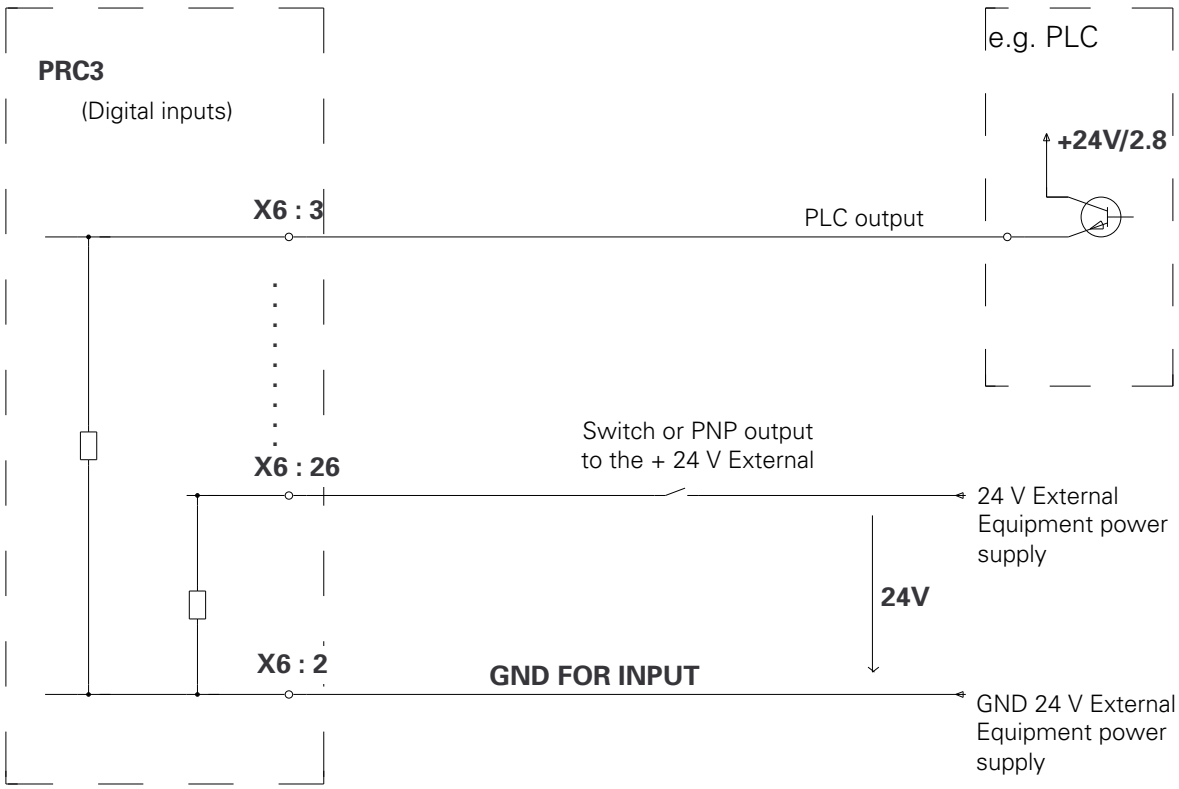


Technical data of the digital inputs :

Nominal value : 24 VDC
For "0" signal : 0-1.6 V
(Negative input voltage, max. -10.0 V)

For "1" signal : 14-30 V
(30 V Permanent, max. 35 V for t<100 ms)

Input voltage : Typically 4.8 mA (at 24 V)

Figure 25.

## 5.5 Incremental pulse generator connection for synchronization : SYNCH

The plug and the pin assignment for the digital control signal is identical for both Hardware versions :

| | | |
|---|---|---|
| Housing version : | Back plane - BP 1 | Plug X5 |
| Rack version : | Back plane - BP 2 | Plug X5 |

*Plug assignment - X5 SYNCH:*

| Connection X5 | Function | |
|---|---|---|
| 1 | Connection for cable screen | SHIELD |
| 2 | Signal reference voltage +24 V | COMMON |
| 3 | Increm. pulse generator signal - B | Ch. B |
| 4 | Increm. pulse generator signal - A | Ch. A |
| 5 | Power supply output GND | GND OUT |
| 6 | Power supply output + 24 V | 24 V OUT |
| 7 | Power supply output GND | GND IN |
| 8 | Power supply input +24 V | 24 V IN |

For all synchronizing axes the incremental pulse generator signal from the conveyor must be fed through the plug X5. The power supply of the incremental pulse generator is through the plug X5 of the first PRC 3.
The power supply of the external incremental pulse generator is fed through the connections X5.7 and X5.8. The filtered voltage (24 V) is available on connections X5.5 and X5.6 and can now be fed through signal leads in a cable to the incremental pulse generator.

### 5.5.1 Electrical specifications of the incremental pulse generator for synchronization

An incremental pulse generator with 24 V power supply is foreseen for synchronization. The signal input for synchronization must be controlled by a Pull down stage, therefore the incremental pulse generator must have an NPN or Push-Pull output.

Control principle of the SYNCH inputs:

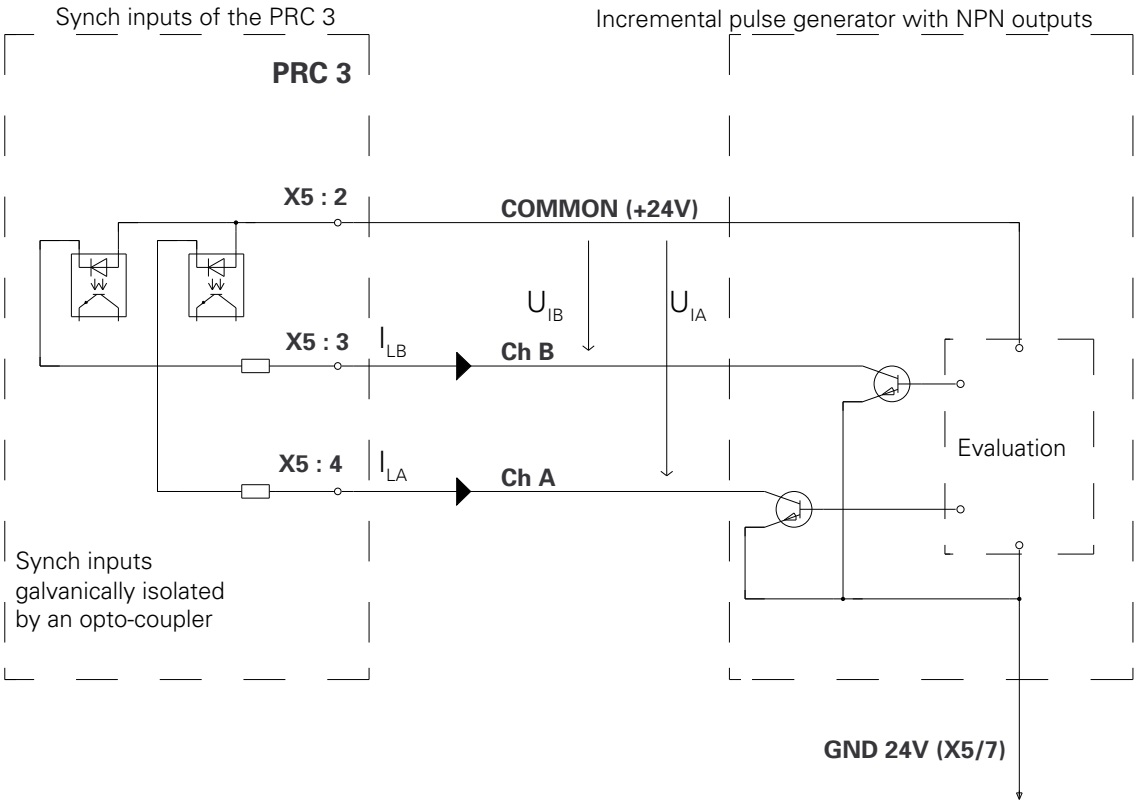


Technical data the synchronization inputs :

Switching threshold :

$U_{IHmin.}$ = 16.0 V
$U_{ILmax.}$ = 3.5 V

Typical input voltage with UI = 24 V
$I_{ITyp}$ : = 5.3 mA

Maximum input voltage :

$U_{IHmax.}$ = 30 V
(30 V Permanent, max. 35 V for t< 100 ms)

Maximum negative input voltage :
$-U_{IHmax.}$ = 5 V

Figure 26.

### 5.5.2 Connection example for the synchronization of multiple axes

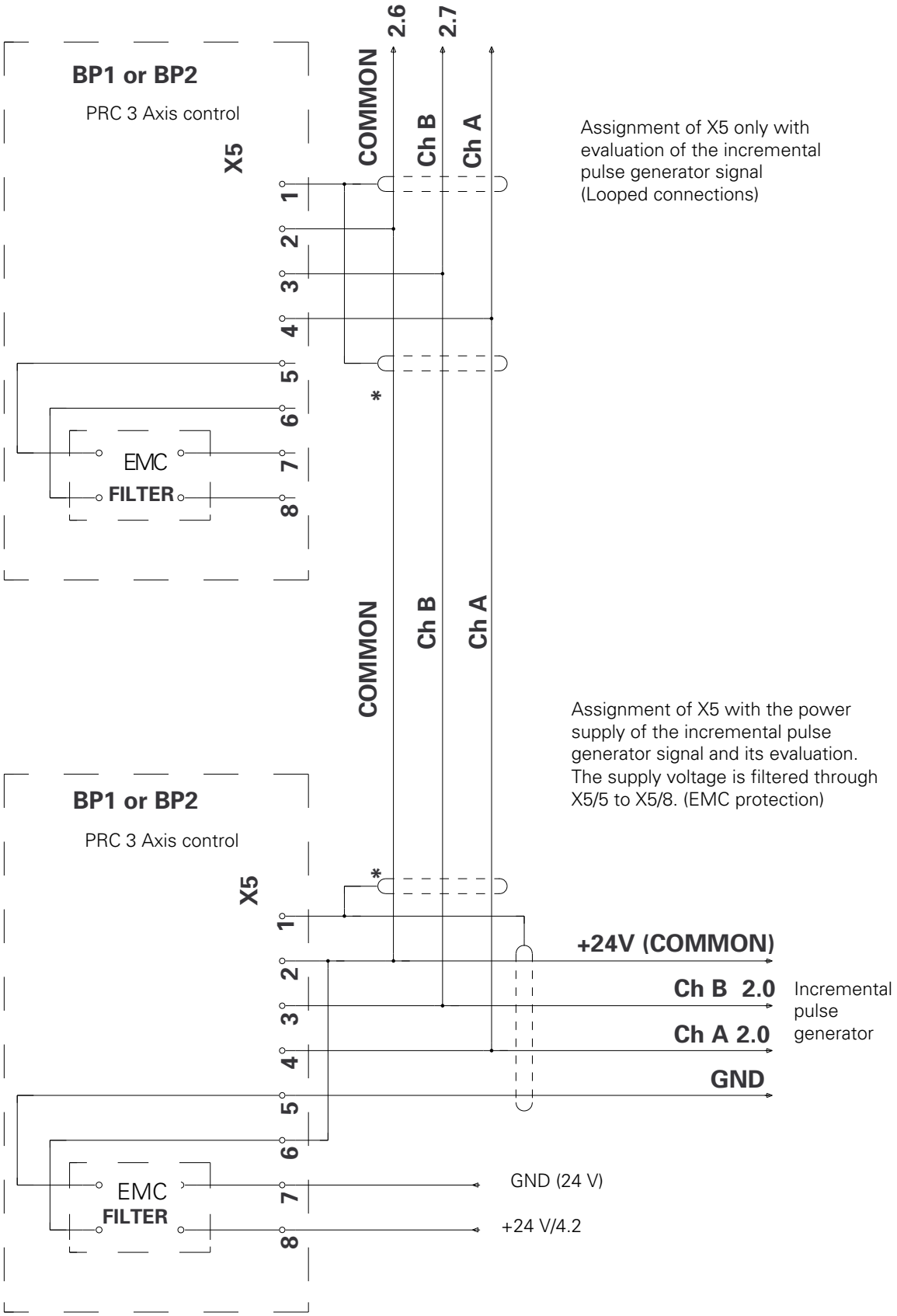


***** Cable screening is not required when the connection is kept short and is separated from other cables. When the cable is placed in a cable channel then cable screening is absolutely essential.

Figure 27.

## 5.6 RS 422 Serial interface

There are special operating instructions available giving information for using the RS 422 Serial Interface with the Programmable Logic Controller (PLC) Simatic S5-115U.
The RS 422 serial interface is an interface with differential signal transmission, through which a number of participants can communicate.
Each participant requires a pair of transmitter, and receiver cables.

The plug and the pin assignment for the serial interface is identical in both Hardware versions.

| | | |
|---|---|---|
| Housing version : | Back plane BP 1 | Plug X4 |
| Rack version : | Back plane BP 2 | Plug X4 |

*Plug assignment - X4 RS 422:*

| Connection X4 | Function | |
|---|---|---|
| 1 | Connection for cable screening | SHIELD |
| 2 | Transmitter output - A | TDA |
| 3 | Transmitter output - B | TDB |
| 4 | Receiver Input - A | RDA |
| 5 | Receiver Input - B | RDB |
| 6 | Reference lead - Ground | Ref. GND |

Technical data :

| | |
|---|---|
| Interface type : | RS 422 |
| Number of receivers per driver : (Last receiver with cut-off) | 32 |
| Baud rate : | 9600 Baud |
| Maximum cable length : (Depending on the type of cable used) | 1000 m |

### 5.6.1 Connection example for the serial interface

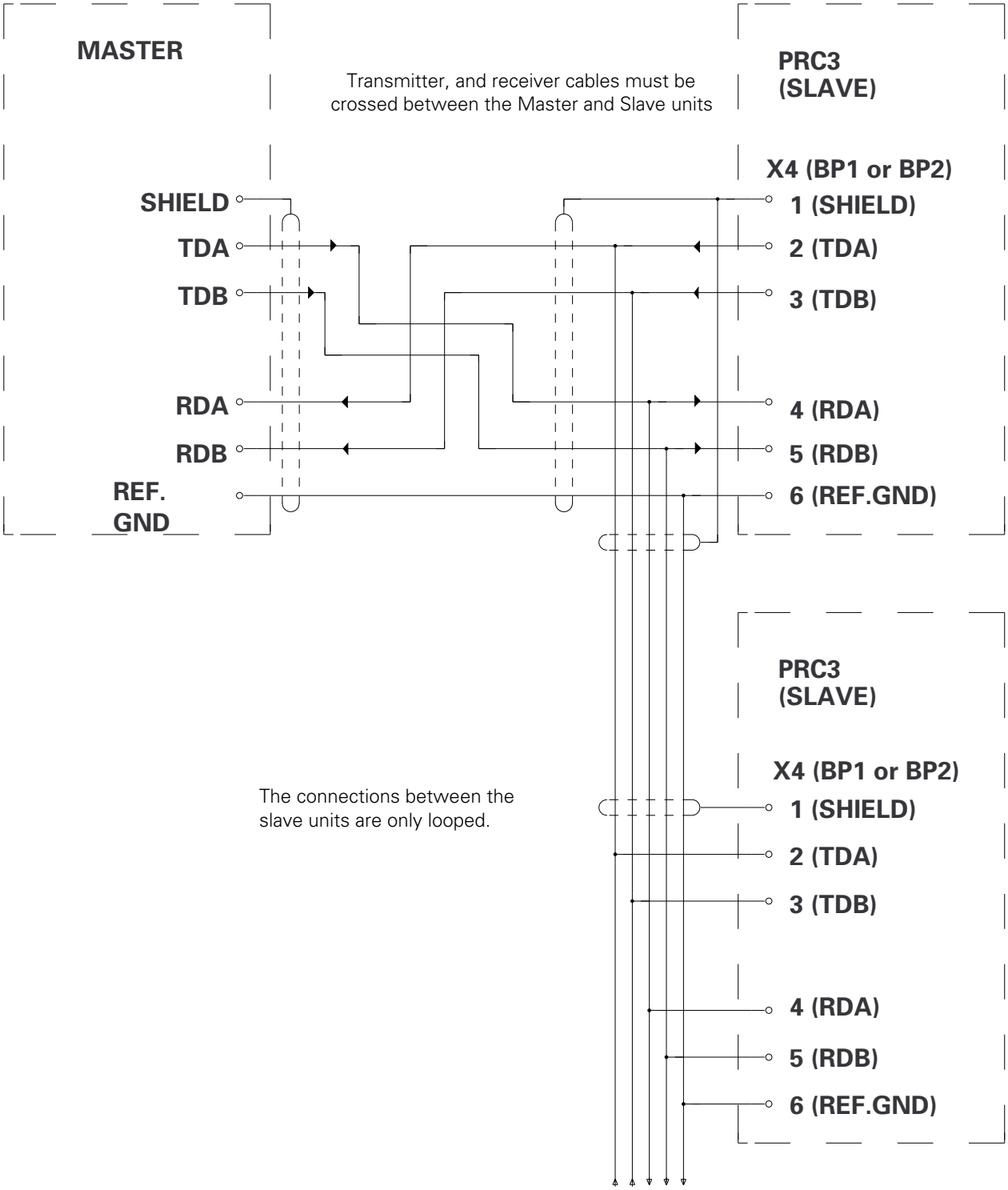


Figure 28.

## 5.7 Positioning - POS

The incremental pulse generator and the reference switch for positioning are connected to this plug.

*Plug assignment - X2 POS Housing version :*

| X2 Positioning (POS) | |
|---|---|
| Connection No. | Assignment |
| 6A | GND 24 V POS |
| 6B | + 24 V POS |
| 7A | Ch. B |
| 7B | Ch. A |
| 9A | Ref. Point |

Plug designation - X2 POS : *Front view*

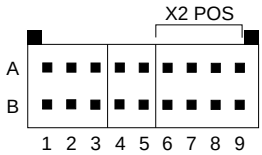


*Plug type* : Connectral Series 320, 18 pole, 2 row

Figure 29.

*Plug assignment - Rack version X2 POS :*

| X2 Positioning (POS) | |
|---|---|
| Connection No. | Assignment |
| 1 | Shield |
| 2 | Ch. A |
| 3 | Ch. B |
| 4 | Ch. Z* |
| 5 | Ref. Point |
| 6 | GND 24 V POS |
| 7 | GND 24 V POS |
| 8 | +24 V POS |
| 9 | +24 V POS |
| Case | Shield |

Plug type:
D-Sub Plug
9 pole / female

Signals marked with an ***** are not evaluated

## 5.8 Drive control - DRIVE

The control signal for the PRP 1 Power pack is connected to on this socket.

*Plug assignment - X3 DRIVE Housing version :*

| Connection No. X3 | Function | |
|---|---|---|
| 1A | Analogue ground for Theoretical value | ANA GND |
| 1B | Analogue ground for Theoretical value | ANA OUT |
| 2A | - Direction of rotation signal (negative) | -SOA |
| 2B | + Direction of rotation signal (positive) | +SOA |
| 3A | - Activating signal - PRP 1 (negative) | -RUN |
| 3B | + Activating signal - PRP 1 (positive) | +RUN |

Plug designation - X3 DRIVE : *Front view*

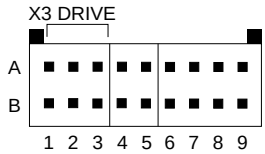


*Plug type* : Connectral Serie 320, 18 pole, 2 rows

Figure 30.

Plug assignment - X3 POS Rack version :

X3 Positioning (POS)

| Connection No. | Assignment |
|---|---|
| 1 | Shield |
| 2 | + Ready * |
| 3 | + RUN |
| 4 | + SOR |
| 5 | ANA OUT |
| 6 | - Ready * |
| 7 | - RUN |
| 8 | - SOR |
| 9 | ANA GND |
| Case | Shield |

Plug type:
D-Sub Plug
9 pole / female

Control principle of the DRIVE Connections :

Example : SOR

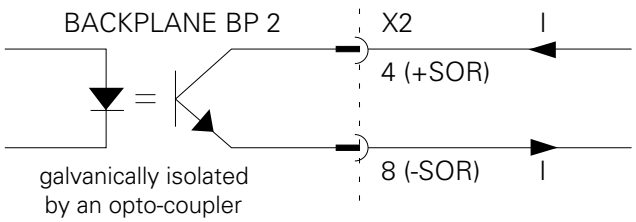


Figure 31.

Signals marked with an * are not evaluated

## 5.9 Keypad display connections

The keypad and display connection is only possible with the Rack version on the Back plane (BP 2).

*Plug Assignment - X9 DISPLAY Rack version :*

| Connection No. BACK PLANE 2 | Connection designation |
|---|---|
| 1 | Shield |
| 2 | VCC |
| 3 | SELECT 1 |
| 4 | SELECT 2 |
| 5 | ENABLE |
| 6 | DATA |
| 7 | CLOCK |
| 8 | KEY |
| 9 | VCC |
| 10 | VCC |
| 11 | GND |
| 12 | GND |
| 13 | GND |
| 14 | GND |
| 15 | GND |

Plug type : 15 pole, female

# 6. Synchronization

## 6.1 Function

The PRC 3 Axis control makes synchronization of the axes with a conveyor possible. The maximum permissible speed of the conveyor is 6 m/min. The axes can travel synchronously or relatively with the Conveyor (Axis speed = Conveyor speed + Relative speed).

Function principle :

An incremental pulse generator for positioning the conveyor chain is fitted to the conveyor. The conveyor position is read by the PRC 3 Axis control and serves as the position theoretical value for the axis to be synchronized. The conveyor position is standardized and passed on to external controls as the signal - CONVEYOR CYCLE. The synchronization sequence of the axis is temporally controlled by an external control (e.g. PLC).

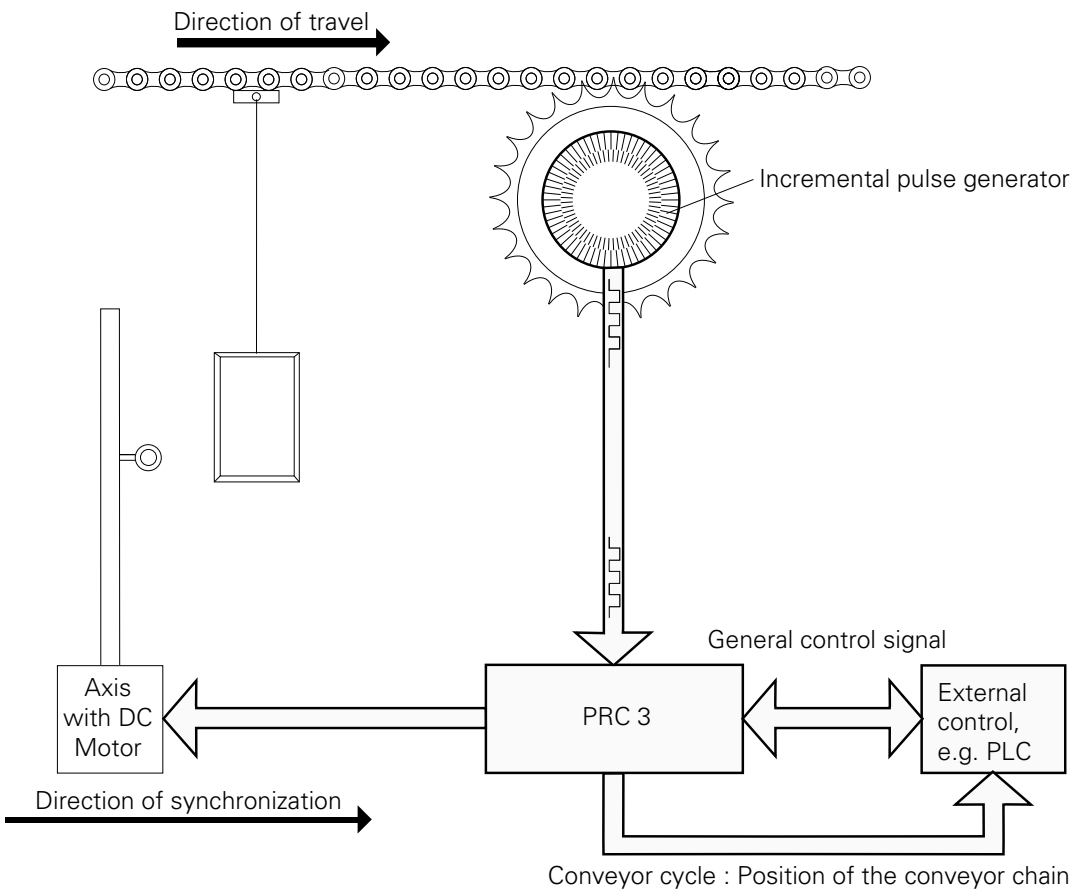


Figure 32.

## 6.2 Start-up of synchronization

The standard version of the PRC 3 Axis control already has all the Hardware necessary for synchronization. For the Start-up only the incremental pulse generator must be fitted onto the conveyor and supplied with 24 V DC.
(see Chapter 3 - Incremental pulse generator connection)

For the power supply of the incremental pulse generator a PS 2 Power Supply unit can be used. A place in the Housing version is reserved for the power supply unit. In the Rack version space is reserved in a drawer unit (9 TE/4,5 cm) for the power supply unit.

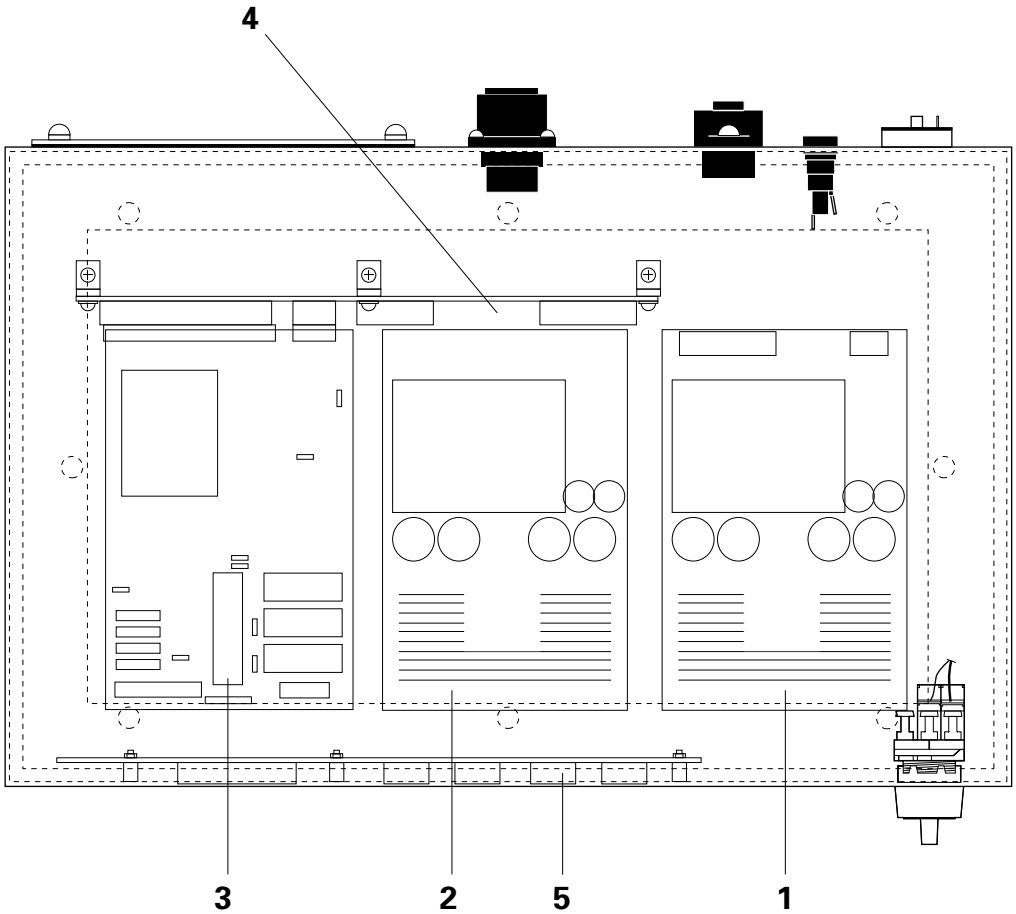


1 Supplementary power supply for SYNCH (PS 2, Order No. 346 160)
2 PS 1 Supply unit for PRC 3
3 MICRO 3 Printed circuit board
4 BP 1 Back plane pcb
5 Front display for PRC 3

Figure 33.

## Contact assignment of the PS 2 supplementary power supply for SYNCH

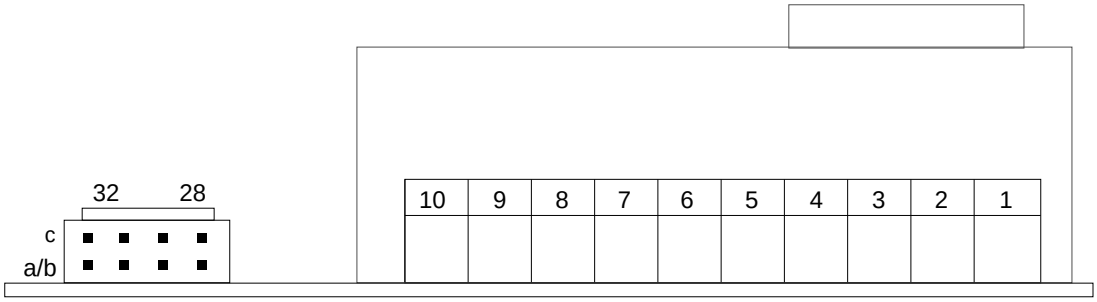


Plug connection for 24 VDC

+24 V : 28 a/b and 28 c
GND 24 V : 31 c and 32 c

Connection for the Mains supply und the voltage selection.
The plug und pin assignment is identical for both Back planes - BP 1 and BP 2 (see Chapter 5.1).

Figure 34.

Plug type for 24 V connection :

Front view (Plug contact block)

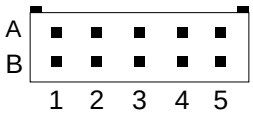


Connectral - Series 320, 10 pole / 2 row

Assignment : 1A : +24 V (corresponds to 28 c)
5A : GND 24 V (corresponds to 32 c)

Figure 35.

## 6.3 Guidelines for fitting the incremental pulse generator to the conveyor

For an accurate detection of the chain conveyor position the resolution for the incremental pulse generator (number of pulses/revolution) should be chosen so that the mechanical conversion (Take-off pinion) of the number of increments per dm of the travel range lies within 500-999 pulses/dm. Normally, an incremental pulse generator with 2000 increments per revolution is used. This corresponds to approximately 2.5 to 5 revolutions of the pinion per metre.

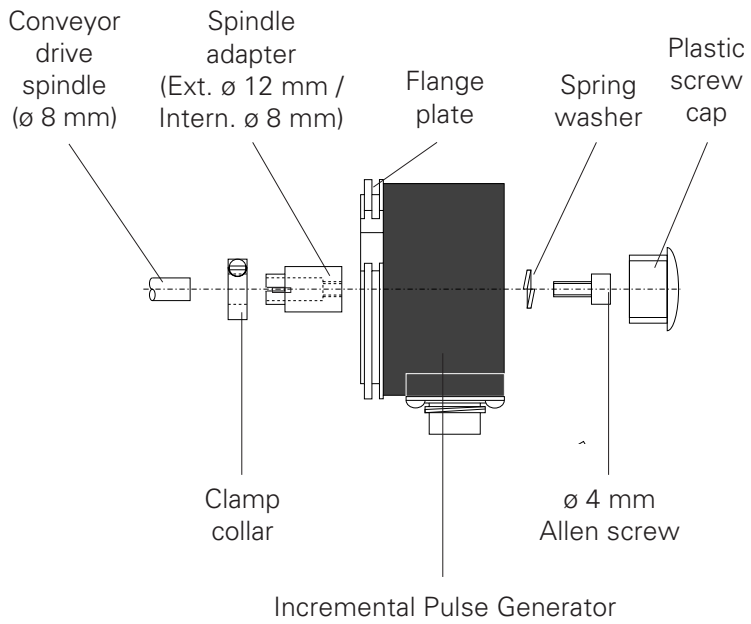


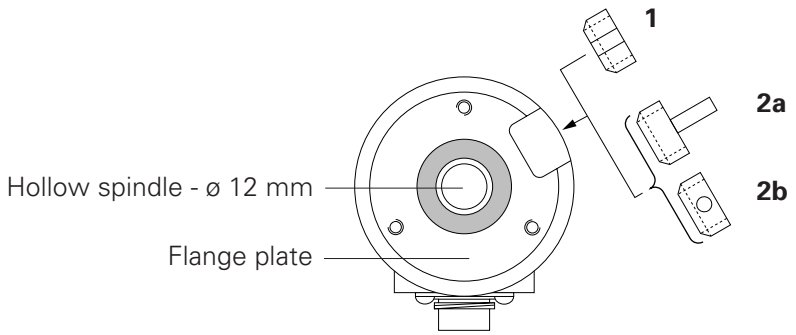


**1** = Buffer
**2a** = Stop pin in radial position
or
**2b** = Stop pin in axial position

Incremental pulse generator (front view)

Figure 36.

## 6.3.1 Instructions for fitting the incremental pulse generator

The incremental pulse generator is supplied by GEMA.
In order to guarantee trouble-free operation of the incremental pulse generator, and the whole powder coating booth the following points must be observed thoroughly:

- **never fit** the incremental pulse generator **to the motor spindle**, but only on the drive spindle of the conveyor
- fit the incremental pulse generator **as close to the booth entrance** as possible.
- if the incremental pulse generator is fitted with a **slipping clutch**, fit the incremental pulse generator so that when the chain is stopped because of overloading, **the incremental pulse generator must also stop**.

The incremental pulse generator is fitted either directly onto the drive spindle of the conveyor or with the aid of a spindle adapter (see Fig. 37). If the drive spindle is not ø 8 mm, then a suitable spindle adapter can be ordered.

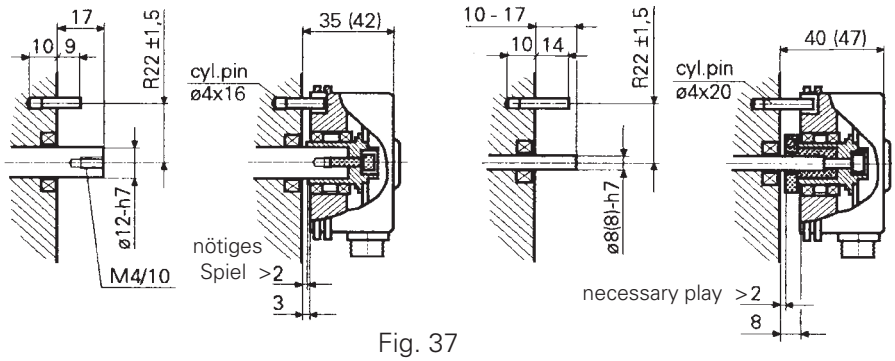


Fig. 37

**ACHTUNG:** **Never fit the incremental pulse generator on an additional fixture supplied by the customer (flange or similar) when the generator is fitted to the drive spindle, even when the spindle is perfectly aligned.**
**If the incremental pulse generator is fitted in a different manner to the above mentioned method, always consult a GEMA service centre first.**

The rotation of the incremental pulse generator with the drive spindle is stopped by a buffer (**1**) or a stop pin (**2**), which fits onto the fixing flange (supplied by the customer) and into the specially made cut-out in the incremental pulse generator flange plate. It is recommended to stick the torque buffer/stop pin to the flange plate of the incremental pulse generator with commercially available Cyan acrylic adhesive (Sicomet 50 or Loctite 406). The stop pin can be fitted radially (2**a**) or axially (**2b**) depending on how the fixing flange is made.

The electrical connection to the incremental pulse generator is made with the plug supplied (Fig. 37a)

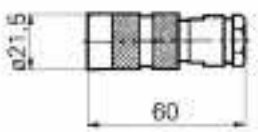


Plug : *Type 10 42 36* / IP 64 / Straight type for 5 x 0.34 mm² cable

Fig. 37a

## 6.4 System parameters for synchronization

System parameters - SP 10, SP 11, and SP 12 must be set to operate the synchronization. More information about these settings is found in Chapter 2.12.

Adjustable system parameter settings

| Display | | Axis data | SPV | Default |
|---|---|---|---|---|
| 5 10 | SP10 | Incr.pulse generator adjust.(Pulses/dm) | 1-9999 | 583 |
| 5 11 | SP11 | Circuit amplification (Factor) | 1-1500 | 1100 |
| 5 12 | SP12 | Conveyor cycle for PCL (mm) | 5-50 | 10 |

The system parameter value selected on Start-up may only be changed after consultation with a Gema-Volstatic service centre.
Fill in the actual system parameter values in the corresponding table in the appendix.

Example for determining the incremental pulse generator adjustment - SP 10

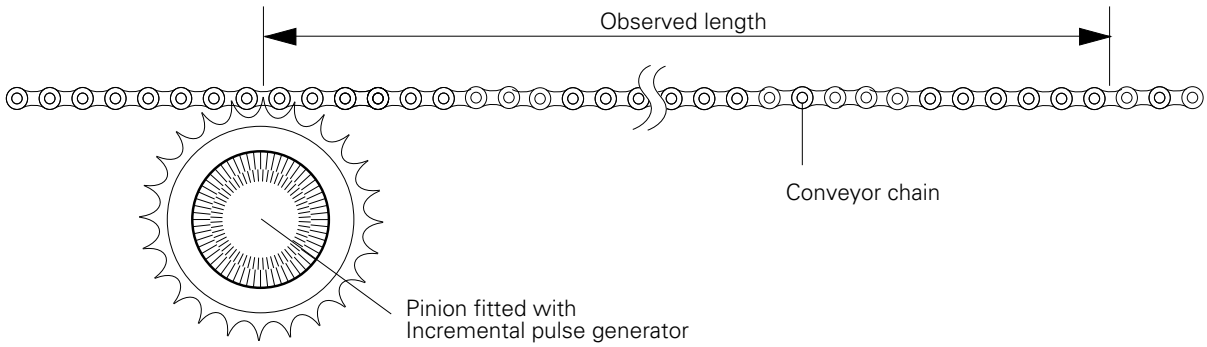


Observed length : l (m)
Number of links of the conveyor in the observed length : N
Number of teeth on the sprocket : n
Resolution of the incremental pulse generator : A (Inc/n)

$$\mathbf{SP\ 10 = \frac{N}{n} \times \frac{A}{l} \times 0.1}$$

Example : l = 1.97 m —> N = 80
n = 12
A = 200 Inc/n

$$SP10 = \frac{08}{12} \times \frac{2000\ Inc}{1.97\ m} \times \frac{0.1\ m}{dm} = \frac{676{,}8\ Inc}{dm}$$

Input value for System parameter 10 = 677

Figure 38.

## 6.5 Synchronizing with the PRC 3

The synchronization operation of the PRC 3 is initiated by the digital control input - SYNCH. Any of the 64 programs can be used for the synchronization operation. The relative speed for synchronization is one of the six program parameters and is identified with the symbol "**=**". If the synchronization operation is activated, then only the relative speed "**=**" of the program step is carried out. The other 5 program parameters have no further function during synchronization.

The following is valid :

$$V_{SYNCH} = V_{Conveyor} + V_{Relative}$$

### 6.5.1 Example for synchronization

| Display: | | Input value: |
|---|---|---|
| U | = | 0.400 |
| - | = | 0.300 m/s |
| - | = | 0.000 m/s |
| o | = | 0.00 sec. |
| F | = | 0 Passive |
| A | = | 0 Address (no following program) |

Figure 39.

*Travel/Time diagram for the axis movement for synchronization without STOP*

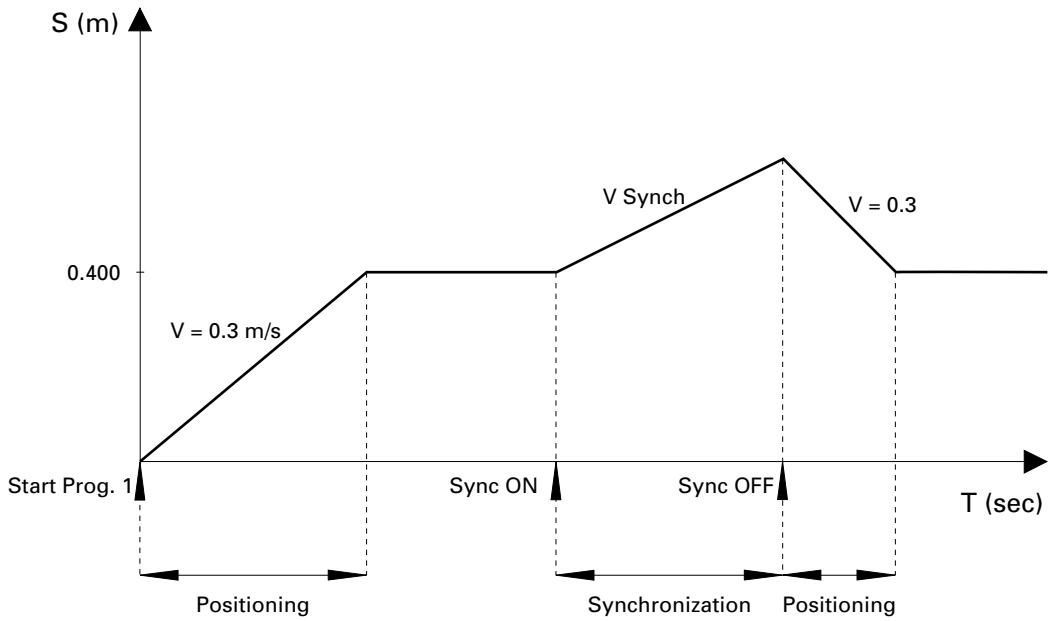


If the synchronization operation is deactivated with the control signal - SYNCH, without a STOP (START/STOP inputs remain activated), the axis travels to the actual program position.

Figure 40.

*Travel/Time diagram of the axis movement with synchronization and STOP*

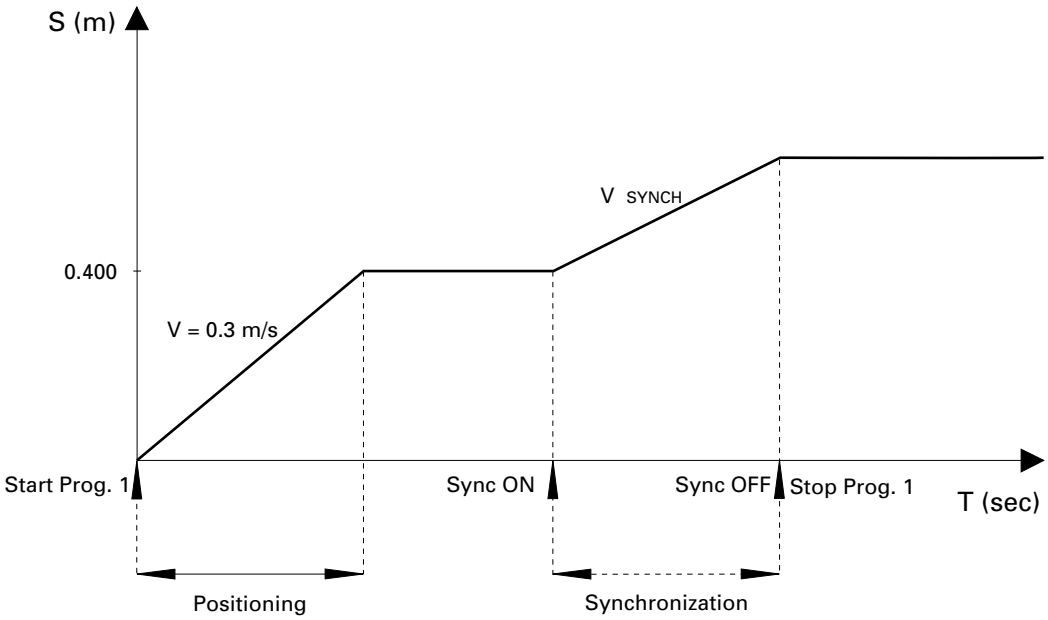


If the synchronization operation is deactivated with the control signal - SYNCH and the axis stopped (START/STOP inputs are deactivated), the axis is stopped and holds the relative position.

Figure 41.

# 6.6 Digital control signals for synchronization

## 6.6.1 Synchronization input - SYNCH ON

Switching between synchronization, and positioning operation is done with the digital input - SYNCH ON.

SYNCH ON : LOW → Positioning operation

SYNCH ON : HIGH → Synchronization operation

## 6.6.2 Conveyor cycle outputs

The PRC 3 provides two digital signal outputs for the sequence control so that the conveyor position can be determined.

These are :

| | |
|---|---|
| CONVEYOR CLOCK : | Conveyor cycle in mm<br>(Resolution by SP 12) |
| CLOCK SIGN : | Preceding sign (+/-) of the conveyor cycle |

A high pulse, with a constant pulse length of 25 ms, is given over a predetermined distance by the system parameter - SP 12 on the output - CONVEYOR CLOCK. The direction of travel can be determined with the output - CLOCK SIGN.

The system can accomodate a maximum conveyor speed of 6 m/min.

*Pulse rate on the output - CONVEYOR CLOCK*

CONVEYOR CLOCK

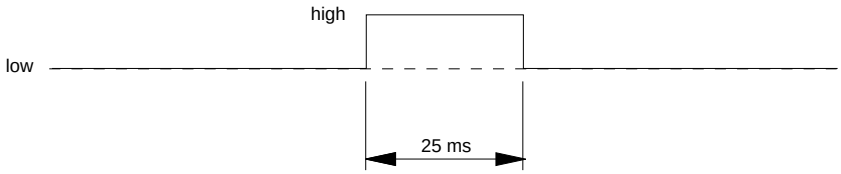


At a maximum conveyor speed of 6 m/min.

CLOCK SIGN

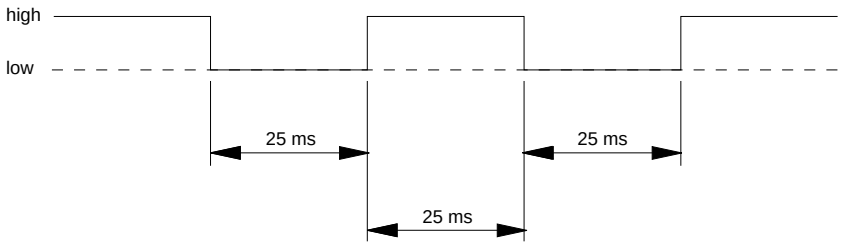


Switch condition of the output - CLOCK SIGN :

CLOCK SIGN = Low → Conveyor runs backwards
CLOCK SIGN = High → Conveyor runs forwards

Figure 42.

# 7. Error messages

**E01**: Incorrect key
The error message - "***E01***" appears as soon as an incorrect key is pressed. This can happen when the keypad is locked or when a key is pressed in a program level where this is not permitted.
The "***E01***" message appears on the display for as long as the incorrect key is pressed.

Acknowledgement is not necessary.

**E07 :** The error message appears when the PRC 3 Axis control is connected through a serial interface with a PLC control and a Time-out error is recognized.

Acknowledgement : By pressing the key F

Source of error : When the slave on the Bus is actively connected, but not addressed by the Master through a command sequence list (PLC program).

**E08** : The error massage "E08" appears when the Check Sum in the EPROM does not correspond with the actual Check Sum of the operating program.

Acknowledgement : None.

Source of error : EPROM incorrectly "burnt-in".

Course of action : Replace with a new EPROM.

**E9** : External alarm input is activated / axis locked by digital control input - "EMERGENCY STOP".

Acknowledgement : Not necessary.

Source of error : EMERGENCY STOP is aprroached (LOW). EMERGENCY STOP is activated by the system parameter - SP 8.

**E10**: Reference point not reached
When switching on the axis control "E10" appears on the display. This message means that the position of the Reference point has not yet been stored. By pressing the key the Travel to Reference point can be released. The Travel to Reference point can also be released digitally through the digital input - "Travel to Reference point".

Acknowledgement : Travel to Reference point with the key in manual operation. In automatic operation the control input "START REF" must be approached.

**E11**: RAM Reset is carried out.
This message appears when a RAM Reset is carried out .

Acknowledgement : by up-dating the system parameter (See Chapter 2.12)

**E12**: System parameter (SP) not set.
This error message appears when the Check Sum is incorrect for all the system parameters. When there is a Check Sum error the SPV (System Parameter Values) are loaded with default values.

Acknowledgement : by pressing the key F a RAM Reset is carried out and the error message - "E11" appears on the display.

Source of error : Replacing the RAM modules
Data loss in RAM

**E20**: Software end stop is overrun (Synchronization).
This error message appears when the actual position of the axis is greater than the defined software end stop (Software end stop = Upper stroke limit + 10 mm). This error can only happen in the synchronization operation.

Acknowledgement : by pressing the key F

Source of error : The travel distance of the axis when synchronizing lies outside the maximum permissible travel distance (SP 1, SP 2).

**E21**: Positioning error too large.
Acknowledgement : by pressing the key F

Source of error : No signal from incremental pulse generator
No signal from tachogenerator
Axis has run into the end buffer
(SP 1 incorrectly set )
No theoretical value (ANA, GND, ANA OUT) for PRP 1
Adjusting parameter PRP 1 incorrectly set
(See PRP 1, Chapter 3.2)

**E22**: Tachogenerator error

Acknowledgement : by pressing the key F

Source of error : Tachogenerator incorrectly or not connected.

**E24 :** This error message appears when there is an incremental pulse generator error. *(Cable break signals A or B, or A and B)*

Acknowledgement : by pressing the key F.

Source of error : No incremental pulse generator signals.

**E25 :** This error message appears when the direction of rotation of the positioning detection is reversed.

Acknowledgement : by pressing the key F.

Source of error : Incremental pulse generator signals A and B are reversed.

**END :** No further program step.
When in the program level - STEP the next STEP should be released with the key I and no further STEP (program step) is available the error message "***END***" appears until the appropriate key is released.

**n.Co :** No "Continuous" (see page 30).

# Spare Parts List

## Ordering Spare Parts

When ordering spare parts for powder coating equipment, please indicate the following specifications :

1. Type, and serial number of your powder coating equipment
2. Order number, quantity, and description of *each* spare part.

*Example :*

1. **Type** *PRC 3,* **Serial no. :** *xxxx xxxx*
2. **Order no. :** *227 161, 5 pieces, Fine wire fuse.*

When ordering cable and hose material the length required must also be given.
The spare part numbers metre/yard ware is always marked with an *****.

All wear parts are marked with a **#**.

All dimension of plastic powder hoses are given with external and internal diameters :
e.g. ø 8 / 6 mm = 8 mm outside diameter (o/d)/ 6 mm inside diameter (i/d).

Issued 06/95

# PRC 3 Powder Reciprocator Control

## Control unit, Housing version (complete)

| | | |
|---|---|---|
| 1 | Control board - Micro 3 (PBC) | 344 257 |
| 2 | EPROM 3.XX.1 - DC | 344 230 |
| 3 | 512 kB RAM for program memory | 240 974 |
| 4 | PS 1 Power supply (PBC) | 340 383 |
| 5 | Front display for PRC 3 | 342 904 |
| 6 | BP 1 Back plane (PBC) | 342 785 |
| 7 | Main switch | 235 911 |
| 8 | Lamp element | 235 920 |
| 9 | Contact element | 235 938 |
| 10 | Fuse holder | 200 131 |
| 11 | Fuse - 0.25 AT - 200-240 V | 227 161# |
| | *Fuse - 5.0 AT - 200 -240 V* | *200 166#* |
| | Fuse - 0.5 AT - 100 - 120 V | 201 073# |
| | *Fuse - 10.0 AT - 100 - 120 V* | *200 174#* |
| 12 | Cable with plug | 303 607 |
| 13 | Bulb, 130 V / 20 mA | 203 688# |
| X | PS 2 Power supply board (PBC)<br>(Incremental pulse generator supply for Synchro) | 346 160 |

**#** Wear Parts

## PRC 3 Powder Reciprocator Control

## Control unit, Housing version (complete)

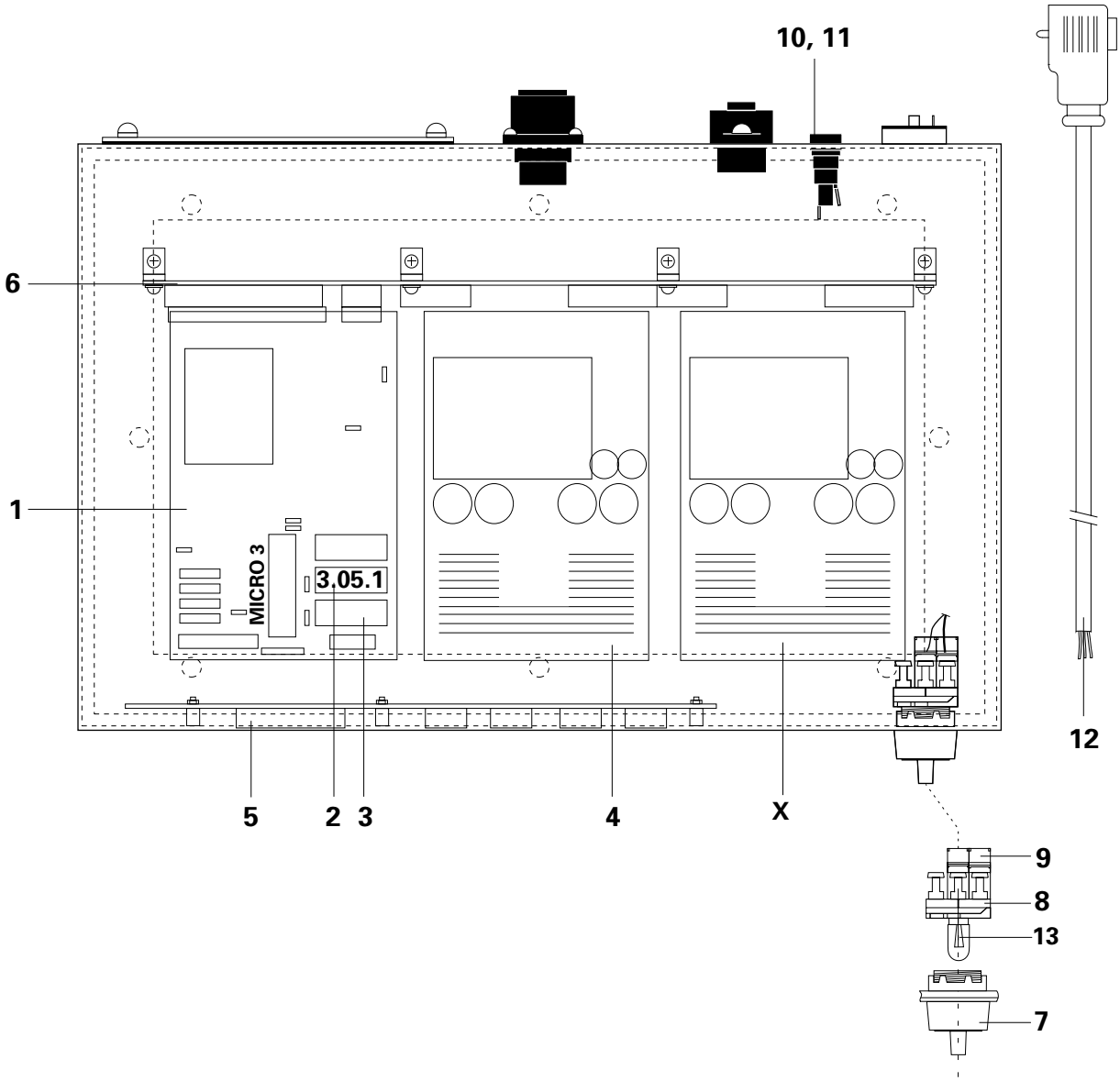


Figure 1.

# PRC 3 Powder Reciprocator Control

## Rack version - BP 2 Back plane

| | | |
|---|---|---|
| 1 | Back plane 2 (PBC - Mounted in a Switch cabinet) | 347 191 |
| 13 | Micro 3 Control board (PBC) for PRC 3 | 344 257 |
| 14 | PS 1 Power supply board (PBC) for PRC 3 | 340 383 |
| | PS 2 Power supply board (PBC) | 346 160 |
| | Mounting frame for display print | 349 186 |

Issued 06/95

## PRC 3 Powder Reciprocator Control

## Rack version - BP2 Back plane

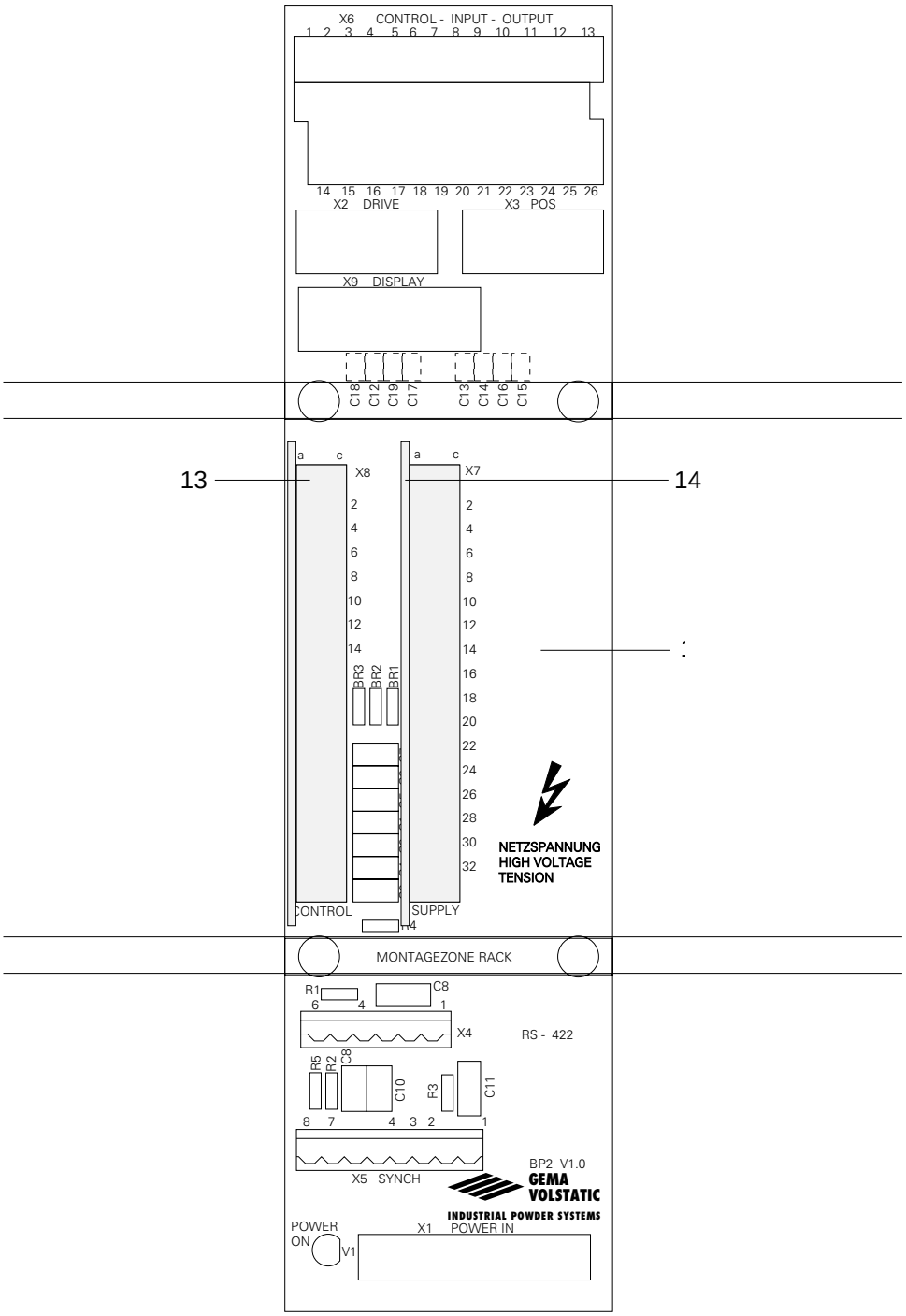


Figure 2.

## Table for system parameters

Fill in the new values of the system parameters for later reference here.

| Display symbol | System parameter | Value | Value | Value | Value |
|---|---|---|---|---|---|
| 401 | SP 1 | | | | |
| 402 | SP 2 | | | | |
| 403 | SP 3 | | | | |
| 404 | SP 4 | | | | |
| 405 | SP 5 | | | | |
| 406 | SP 6 | | | | |
| 407 | SP 7 | | | | |
| 408 | SP 8 | | | | |
| 409 | SP 9 | | | | |
| 410 | SP 10 | | | | |
| 411 | SP 11 | | | | |
| 412 | SP 12 | | | | |
| | Date : | | | | |

Actual Software version :

| Date : | Equipment specification : | Software version : |
|---|---|---|
| | | PRC 3 . __ __ . __ |
| | | |
| | | |
| | | |
| | | |
| | | |
| | | |
| | | |
| | | |
| | | |

(Software version, see Chapter 2.10)

Issued 06/95

## PRC 3 Program parameters

| Prog. no. | Customer | Object | Posit. U | Speed - | Rel. speed = | Dwell time o | Func. start F | Func. end 7 | Prog. addr. A |
|---|---|---|---|---|---|---|---|---|---|
| 1 | | | | | | | | | |
| 2 | | | | | | | | | |
| 3 | | | | | | | | | |
| 4 | | | | | | | | | |
| 5 | | | | | | | | | |
| 6 | | | | | | | | | |
| 7 | | | | | | | | | |
| 8 | | | | | | | | | |
| 9 | | | | | | | | | |
| 10 | | | | | | | | | |
| 11 | | | | | | | | | |
| 12 | | | | | | | | | |
| 13 | | | | | | | | | |
| 14 | | | | | | | | | |
| 15 | | | | | | | | | |
| 16 | | | | | | | | | |
| 17 | | | | | | | | | |
| 18 | | | | | | | | | |
| 19 | | | | | | | | | |
| 20 | | | | | | | | | |
| 21 | | | | | | | | | |
| 22 | | | | | | | | | |
| 23 | | | | | | | | | |
| 24 | | | | | | | | | |
| 25 | | | | | | | | | |
| 26 | | | | | | | | | |
| 27 | | | | | | | | | |
| 28 | | | | | | | | | |
| 29 | | | | | | | | | |
| 30 | | | | | | | | | |
| 31 | | | | | | | | | |
| 32 | | | | | | | | | |

**Photocopy this side for later use.**

Issued 06/95

## PRC 3 Program parameters (continued)

| Prog. no. | Customer | Object | Posit. U | Speed - | Rel. speed - | Dwell time o | Func. start F | Func. end 7 | Prog. addr. A |
|---|---|---|---|---|---|---|---|---|---|
| 33 | | | | | | | | | |
| 34 | | | | | | | | | |
| 35 | | | | | | | | | |
| 36 | | | | | | | | | |
| 37 | | | | | | | | | |
| 38 | | | | | | | | | |
| 39 | | | | | | | | | |
| 40 | | | | | | | | | |
| 41 | | | | | | | | | |
| 42 | | | | | | | | | |
| 43 | | | | | | | | | |
| 44 | | | | | | | | | |
| 45 | | | | | | | | | |
| 46 | | | | | | | | | |
| 47 | | | | | | | | | |
| 48 | | | | | | | | | |
| 49 | | | | | | | | | |
| 50 | | | | | | | | | |
| 51 | | | | | | | | | |
| 52 | | | | | | | | | |
| 53 | | | | | | | | | |
| 54 | | | | | | | | | |
| 55 | | | | | | | | | |
| 56 | | | | | | | | | |
| 57 | | | | | | | | | |
| 58 | | | | | | | | | |
| 59 | | | | | | | | | |
| 60 | | | | | | | | | |
| 61 | | | | | | | | | |
| 62 | | | | | | | | | |
| 63 | | | | | | | | | |
| 64 | | | | | | | | | |

**Photocopy this side for later use.**

Issued 06/95

## MICRO 3 Control board configuration possibilities

**X20** : Power supply for position detection

A : Power supply for position detection from the 24 V supply (standard)

B : Power supply for position detection from the 15 V supply

**X21** : Locking of the RS 422 serial interface

A : Circuit termination active

B : Circuit termination inactive (standard)

**X22** : Front display type

A : 7 digit Front display

B : 5 digit Front display

**X23** : Adaptation of the EPROM

A : 256 kB EPROM (27c - 256)

B : 512 kB EPROM (27c - 512)

**X24** : Is not evaluated (always in Position A!)

**X25** : Is not evaluated (always in Position A!)

**X26** : Adaptation of the RAM

A : 16 kB RAM (DS 1220y, 2 k x 8 Bit)

B : 64 kB RAM (DS 1225y, 8 k x 8 Bit)

**X27** : Activating signal of the circuit termination (RUP)

A : direct (RUN during Reset on Low)

B : inverse (RUN during Reset on High)

**INT0** : Release of the system interrupt - 0

**ON** : Interrupt 0 released (PRC 2, PRC 3)

**OFF** : Interrupt 0 locked (PRC 1, MRC, BC)

**INT1** : Release of system interrupt - 1

**ON** : Interrupt 1 released (PRC 2, PRC 3)

**OFF** : Interrupt 1 locked (PRC 1, MRC, BC)

Issued 06/95

## EPROM / Software Version

| Software version | Date of Change | New Function | Error correction |
|---|---|---|---|
| PRC 3.01.1 | | | |
| PRC 3.02.1 | February 1994 | | Function output 2 (End) |
| PRC 3.03.1 | June 1994 | - Data block reading Serial Interface<br>- Teach In Mode<br>- New acceleration range - 0.500 - 2.500 $m/s^2$ | |
| PRC 3.04.1 | July 1994 | | - Axes offset during the Step Mode operation. |
| PRC 3.05.1 | October 1994 | | - Communications error Sinec-L1. |

Please note with which EPROM or Software version your control unit is equipped.
When ordering a replacement EPROM the latest version will always be supplied.

Documentation PRC 3 - DC



Printed in Switzerland

Issued 06/95

| BACKPLANE X1 | | | | POWER SUPPLY | | | |
|---|---|---|---|---|---|---|---|
| U[V] | N | P | BRIDGE X1 | BR1 | BR2 | BR3 | BR4 |
| 100 | 2 | 4 | 3-8/5-9 | ON | OFF | ON | OFF |
| 110 | 2 | 4 | 3-8/5-9 | OFF | ON | OFF | ON |
| 120 | 2 | 6 | 7-10/3-8 | OFF | ON | OFF | ON |
| 200 | 2 | 9 | 4-8 | ON | OFF | ON | OFF |
| 220 | 2 | 9 | 4-8 | OFF | ON | OFF | ON |
| 230 | 2 | 9 | 6-8 | OFF | ON | OFF | ON |
| 240 | 2 | 10 | 6-8 | OFF | ON | OFF | ON |

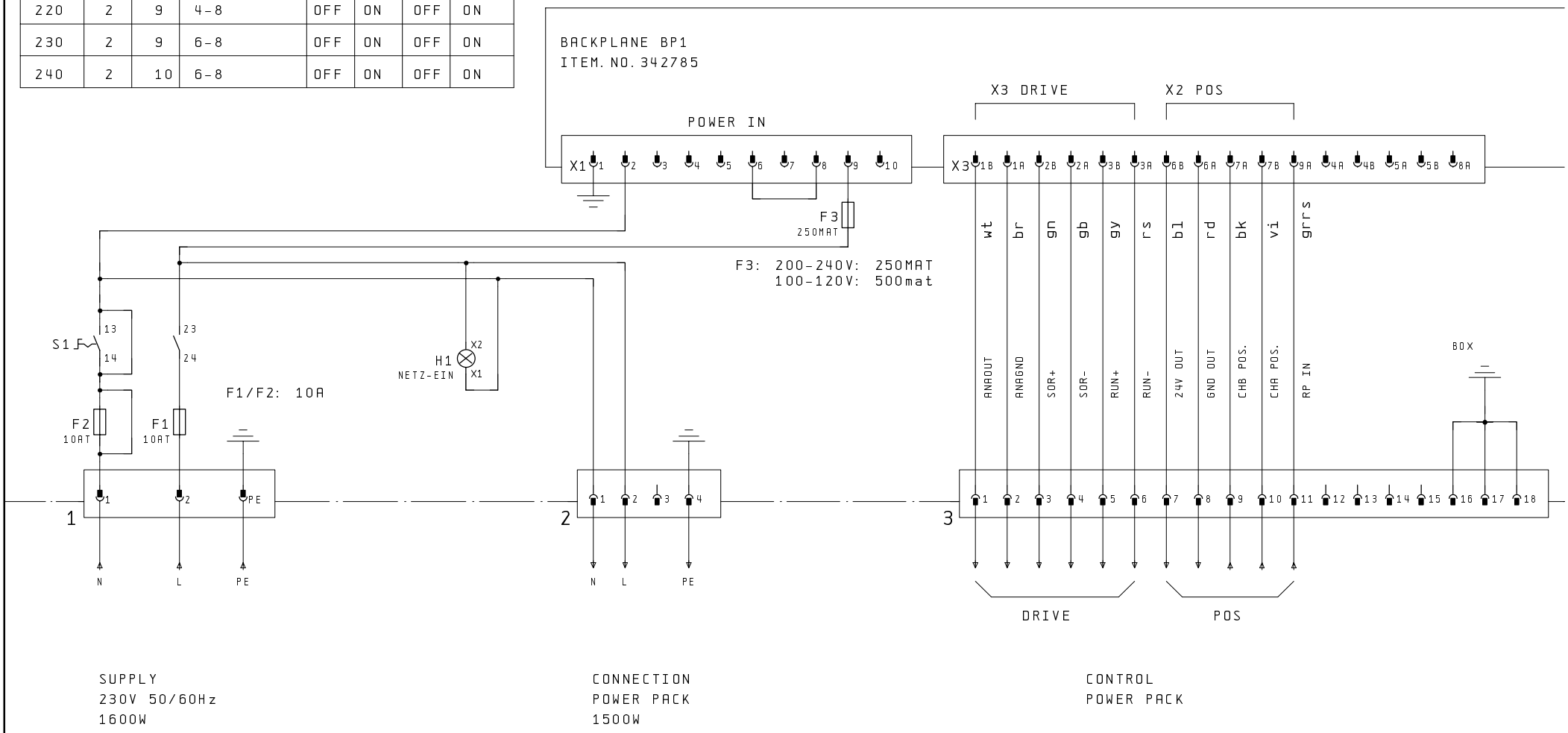


SUPPLY
230V 50/60Hz
1600W

CONNECTION
POWER PACK
1500W

CONTROL
POWER PACK

3 5

| | | | | | | | | |
|---|---|---|---|---|---|---|---|---|
| | | | Datum | 26.05.1997 | WIRING DIAGRAM PRC 3 | ITW GEMA AG | SUPPLY, | MRA07-A016-4 |
| | | | Bearb. | STJ | PRC 3 | Mövenstrasse 17 | CONTROL POWER PACK | |
| | | | Gepr. | 08.03.2001 | | CH-9015 St.Gallen | | ARTIKELNUMMER: 343188 |
| Änderung | Datum | Name | Norm | F+E ELEKTRONIK | Ers.f. / Ers.d. | | | Bl. 4 / 6 Bl. |

BACKPLANE BP1
ITEM. NO. 342785

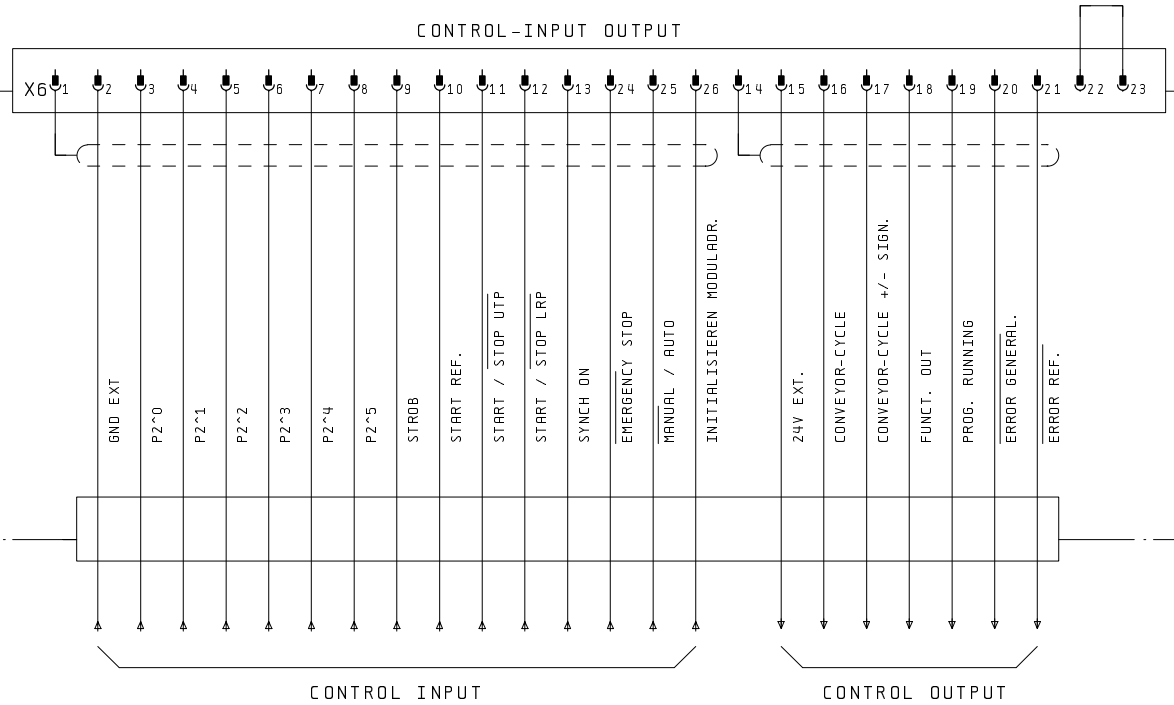


4 6

| | | | | | | | | |
|---|---|---|---|---|---|---|---|---|
| | | | Datum | 24.03.1993 | WIRING DIAGRAM PRC 3 | ITW GEMA AG | CONTROL INPUT, | MRA07-A016-4 |
| | | | Bearb. | STJ | PRC 3 | Mövenstrasse 17 | CONTROL OUTPUT | |
| | | | Gepr. | 08.03.2001 | | CH-9015 St.Gallen | | ARTIKELNUMMER: 343188 |
| Änderung | Datum | Name | Norm | F+E ELEKTRONIK | Ers.f. / Ers.d. | | | Bl. 5 / 6 Bl. |

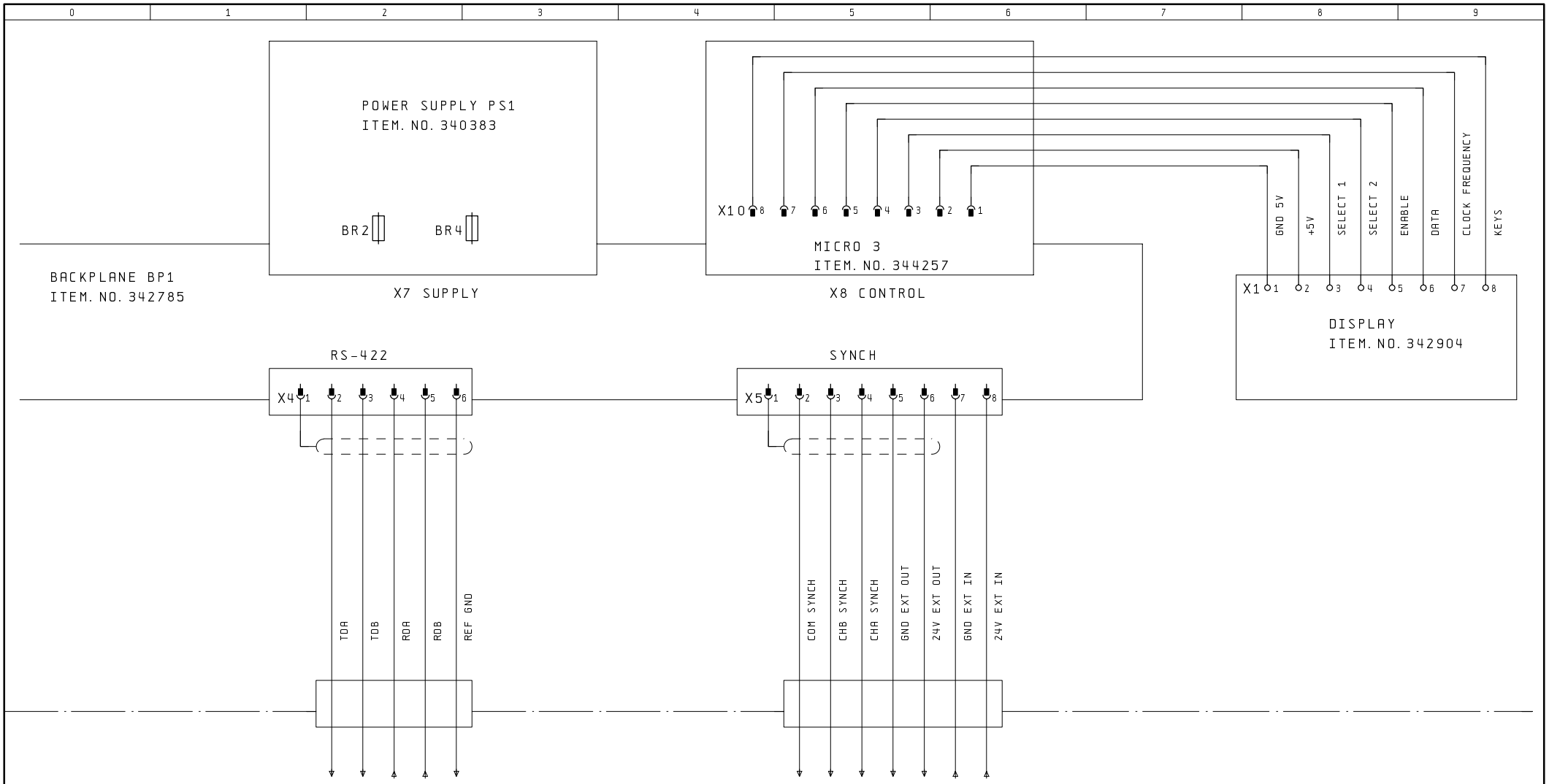


5

| | | | | | | | |
|---|---|---|---|---|---|---|---|
| | | | Datum | 24.03.1993 | WIRING DIAGRAM PRC 3 | ITW GEMA AG | DISPLAY, |
| | | | Bearb. | HTO | PRC 3 | Mövenstrasse 17 | RS422, |
| | | | Gepr. | 08.03.2001 | | CH-9015 St.Gallen | SYNCHRONISATION |
| Änderung | Datum | Name | Norm | F+E ELEKTRONIK | Ers.f. / Ers.d. | | |

MRA07-A016-4

ARTIKELNUMMER: 343188

Bl. 6 / 6 Bl.

Issued 01/97