En

Operating instructions and spare parts list

OptiMove CR07
Axis control unit

Translation of the original operating instructions

Gema

Documentation OptiMove CR07 Axis control unit

For the latest information about Gema products, visit www.gemapowdercoating.com.

For patent information, see www.gemapowdercoating.com/patents or www.gemapowdercoating.us/patents.

Printed in Switzerland

Gema Switzerland GmbH
Mövenstrasse 17
9015 St.Gallen
Switzerland

Phone: +41-71-313 83 00
Fax.: +41-71-313 83 83

E-Mail: info@gema.eu.com

Table of contents

General safety regulations

This chapter sets out the fundamental safety regulations that must be followed by the user and third parties using the OptiMove CR07.

These safety regulations must be read and understood before the OptiMove CR07 is put into operation.

Safety symbols (pictograms)

The following warnings with their meanings can be found in the Gema Switzerland operating instructions. The general safety precautions must also be followed as well as the regulations in the operating instructions.

DANGER!
Danger due to electrically live or moving parts. Possible consequences: death or serious injury

WARNING!
Improper use of the equipment could damage the machine or cause it to malfunction. Possible consequences: minor injuries or damage to equipment

INFORMATION!
Useful tips and other information

Proper use

1. The OptiMove CR07 is built to the latest specification and conforms to the recognized technical safety regulations and is designed for the normal application of powder coating.
2. Any other use is considered non-compliant. The manufacturer shall not be liable for damage resulting from such use; the user bears sole responsibility for such actions. Gema Switzerland GmbH must be consulted prior to any use of the OptiMove CR07 for any purposes or substances other than those indicated in our guidelines.
3. Observance of the operating, service and maintenance instructions specified by the manufacturer is also part of conformity of use. The OptiMove CR07 should only be used,

maintained and started up by trained personnel, who are informed about and are familiar with the possible hazards involved.

4. Start-up (i.e. the execution of a particular operation) is forbidden until it has been established that the OptiMove CR07 axis control unit has been set up and wired according to the guidelines for machinery (2006/42 EG). EN 60204-1 (machine safety) must also be observed.
5. Unauthorized modifications to the OptiMove CR07 exempt the manufacturer from any liability from resulting damage.
6. The relevant accident prevention regulations, as well as other generally recognized safety regulations, occupational health and structural regulations are to be observed.
7. Furthermore, the country-specific safety regulations also must be observed.

Explosion protection	Protection type	Temperature class
CE Ex II 3D	IP54	85 °C

Product-specific safety measures

- Installation work performed by the customer must be carried out according to local regulations.
- All components must be grounded according to the local regulations before start-up.

OptiMove CR07 Axis control unit

The OptiMove CR07 axis control unit is a constituent part of the equipment and is therefore integrated in the system's safety concept.

If it is to be used in a manner outside the scope of the safety concept, then corresponding measures must be taken.

NOTE!
For further security information, see the more detailed Gema safety regulations!

Special security measures

1. It must be ensured, that all components are earthed according to the local regulations before start-up.
2. The OptiMove CR07 axis control unit should be switched on and operated only after carefully reading these operating instructions. Incorrect operation of the axis control unit can lead to accidents, malfunctions or damage to the plant.

WARNING!
The power of the axes is very much stronger than that of a human being! All axes must be secured against access during operation (see local regulations). Never stand under the Z carriage when the reciprocator is not operating!

3. The installation work to be done by the customer must be carried out according to local regulations.
4. The plugs and sockets of the axis control unit and the power unit of the Reciprocator should only be unplugged when the power supply is disconnected
5. The connecting cables between the control unit and the axis must be laid in such a way, that they cannot be damaged during axis operation. Please observe the local safety regulations!
6. The **maximum upper stroke limit** of the reciprocator must always be set with reference to the **maximum height of the booth gun slots**. If an incorrect (too high) stroke limit is set, this can lead to damage to the reciprocator and/or the booth!

WARNING:
During a test run, it must be guaranteed that the unit is not damaged by the test! In particular, the limitations of the stroke range have to be observed (for further information, see chapter "System parameter P1 - Setting the upper mechanical stop")!

7. The voltage supply of the axis is guaranteed by the OptiMove CR07 Axis control unit. The supply voltage amounts to 230 VAC and must always be conducted in the emergency stop circuit. In case of an emergency, the voltage supply to the motor may be interrupted with the emergency stop switch.
8. When repairing the axis, both the CR07 Axis control unit and the axis must be disconnected from the mains according to the local safety regulations!
9. Repairs may be done only by authorized Gema service centers. Unauthorized conversions and modifications can lead to injuries and damage to the equipment. The Gema Switzerland GmbH guarantee would no longer be valid.
10. We point out that the customer himself is responsible for the safe operation of the equipment. Gema Switzerland GmbH is in no way responsible for any resulting damage.

About this manual

General information

This operating manual contains all the important information you require for the working with the OptiMove CR07 axis control unit. It will safely guide you through the start-up process and give you references and tips for the optimal use of your new powder coating system.

Information about the function mode of the individual system components - booth, axis, gun control unit, powder gun or powder injector - should be referenced to their enclosed corresponding documents.

DANGER:

Working without operating instructions

Working without operating instructions or with individual pages from the operating instructions may result in damage to property and personal injury if relevant safety information is not observed.

- ► Before working with the device, organize the required documents and read the section "Safety regulations".
- ► Work should only be carried out in accordance with the instructions of the relevant documents.
- ► Always work with the complete original document.

Function description

OptiMove CR07 Axis control unit

Operating panel

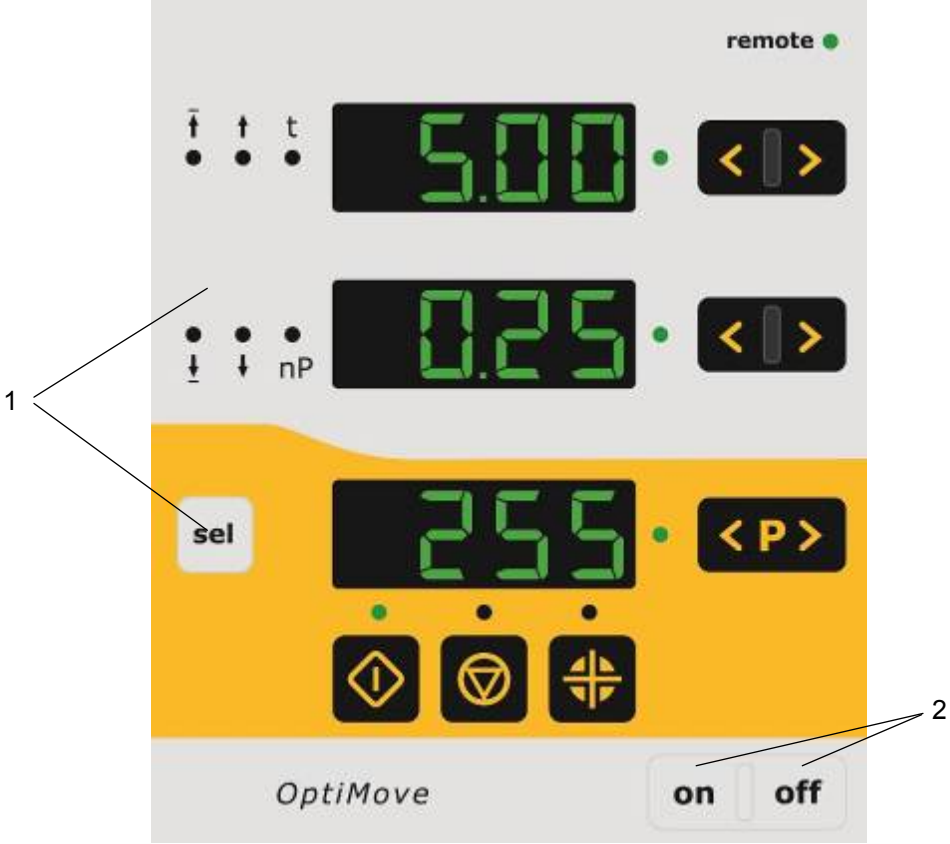

OptiMove CR07 - operating panel

1 Operating and display elements

2 Power switch ON/OFF

Field of application

The OptiMove CR07 Axis control unit is designed exclusively for operating electrically driven axes in electrostatic powder coating equipments. Any other use is considered non-compliant. The manufacturer shall not be liable for damage resulting from such use; the user bears sole responsibility for such actions.

The start-up (i.e. the start of intended operation) is forbidden until it is determined that the control unit and the equipment are installed and connected according to the machine guideline (2006/42/EG). EN 60204-1 (machine safety) must also be observed.

For a better understanding of the interrelationships in powder coating, it is recommended to read completely the operating instructions of the other components, so as to be familiar with their functions too!

Technical data

OptiMove CR07 Axis control unit

General data

OptiMove CR07	
Number of axes per control unit	1
Maximum available programs	255
Max. stroke height (theoretical)	5 m
Maximum speed	0.6 m/s
Minimum speed	0.08 m/s
Acceleration	0.1-2.0 m/s²

Electrical data

OptiMove CR07	
Nominal input voltage	230 VAC
Tolerance	+10% / -10%
Frequency	50/60 Hz
Control current circuit	24 VDC
Fuse F1	10 AT
Power consumption	1.1 kW
Protection type	IP54
Operating temperature	0°C - +40°C (+32°F - +104°F)
Storing temperature	-20°C - +70°C (-4°F - +158°F)

Dimensions

OptiMove CR07	
Width	173 mm
Depth	212 mm
Height	177 mm
Weight	3 kg

Design and function

OptiMove CR07 Axis control unit - structure

The OptiMove CR07 Axis control unit is available as an enclosure version for building into an AS0x control system.

Function description

The OptiMove CR07 Axis control unit is used in axis control systems. A complete axis control system consists of an OptiMove control unit, a frequency converter and an axis with AC motor. The frequency converter receives the supply voltage and the control signals directly from the OptiMove axis control unit.

The OptiMove CR07 axis control unit contains the regulation, visualization and input unit and is responsible for the exact positioning adjustment of the carriage by evaluating the signal from the reciprocator incremental pulse generator in the axis.

The drive motor is equipped with an electrical retaining brake. When the axes control unit holds an axis position (axis standstill), the holding brake will be activated and the frequency transformer released with a time delay (motor without current).

Configuration

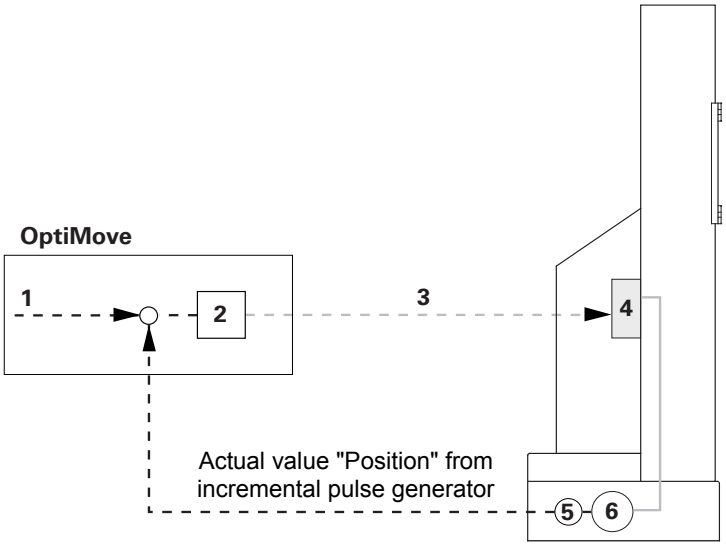

OptiMove CR07 Axis control unit - function

1 Position preset value
2 Regulator
3 RPM preset value
4 Frequency converter
5 Incremental pulse generator
6 AC motor

Operating and display elements, operating modes

Display and input buttons

The control unit is operated by a foil keyboard with input and display elements. All displays (**A1-A3**) are 7 segment displays and all LEDs are green.

In the "Manual" operating mode, all operation functions are released with the foil keyboard. In the "Remote" operating mode, only visualization functions are available.

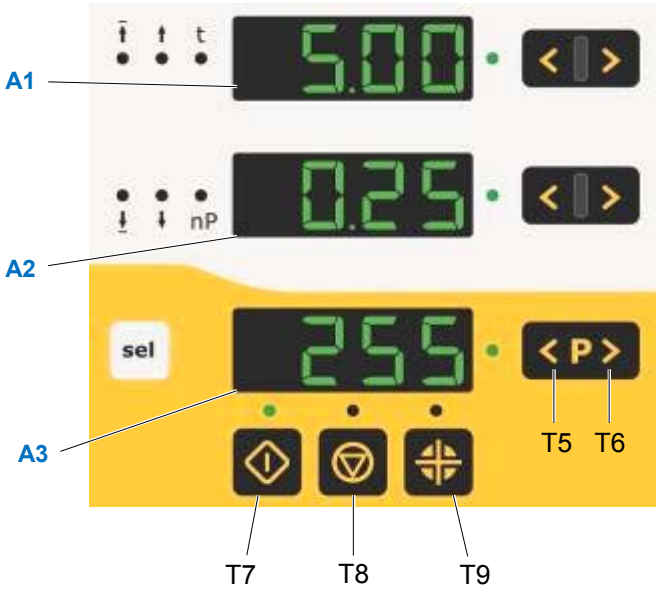

WARNING:
The input keys should only be pressed with fingertips and under no circumstances with fingernails or hard objects!

Display	Meaning
A1	Actual value display (axis position) Preset value input (position above, speed upwards, dwell time, program address)
A2	Actual value display (axis speed) Preset value input (position below, speed downwards)
A3	Displays the selected program number or the error code

Keys	Meaning
	Start axis (**T7**)
	Stop axis (**T8**) press for 5 seconds = system parameter
	Start reference point travel (**T9**)
	Input keys for preset values and system parameters (increase value)
	Input keys for preset values and system parameters (decrease value)
T5, T6	Input keys for program number, error acknowledgment
	Activate display mode (select desired value input LED 4 - LED 9)

LED	Meaning
1 2 3	Preset- actual value mode (dark = actual value mode / green = preset value mode)
4 - 9	Parameter selection display
10	Axis started
11	Axis stopped
12	Axis referencing
Remote	Remote, semiautomatic, keyboard lock

Operating modes

The OptiMove CR07 Axis control unit provides following operating modes:

- Manual
- Remote
- Semiautomatic
- Keyboard lock

The OptiMove CR07 Axis control unit enables the simply creation of 255 programs with the help of the necessary parameters.

"Manual" operating mode

The manual operation permits the selection and the start of the travel programs by the operator on the panel. In addition, the operator has the possibility to change the program number or directly modify the running program.

In this operating mode, all display and operating functions are possible by the operating panel, such as:

- Program numbers selection
- Input mode/display mode selection
- Preset value setting in the input mode (only in pendulum operation)
- Start/Stop
- Error messages acknowledgement
- System parameter mode

"Remote" operating mode

In the **remote** operating mode, the control unit is controlled by CAN bus or DigitalBus.

Only a limited operation is possible by the operating panel, namely:

- Input mode/display mode selection (preset values and actual values visualization)
- Error messages acknowledgement

This is displayed on the operating panel by lighting-up of the green **Remote** LED. In the remote operating mode, the start and the stop keys are out of function.

Keyboard lock

In the **Keyboard lock** operating mode, the control unit operating panel is locked. The prerequisite for it is that the **System parameter P9** must already have been correctly set (**P9=1**, for more see "Setting the system parameters“).

If the systems parameter **P9=1** is set, the keyboard lock function can be activated through the remote digital input. This is displayed on the operating panel by lighting-up of the green **Remote** LED.

Only a limited operation is possible by the operating panel, namely:

- Start, stop, referencing axes
- Input mode/display mode selection (preset values and actual values visualization)
- Error messages acknowledgement

Commissioning

Connections - rear side

Connections - rear side

2.1 Power supply

2.2 Axis power supply

2.3 Axis control signals

2.4 DigitalBus parallel interface

2.5 CAN bus input

2.6 CAN bus output

The cable connections have different plugs and cannot be wrongly connected on assembly.

WARNING:
Before disconnecting the cables from the sockets, always switch off the equipment and disconnect the mains cable!

Initial start-up

Measures before initial start-up

All devices are parameterized and marked on delivery (station, axis and address definition), however, they can be adapted according to client's plant specifications.

NOTE!
All changed values have absolutely to be entered into the parameter table (therefore, see the appendix)!

Electrical wiring and screening concept

All CAN bus users are to be wired in accordance to the enclosed electrical diagrams.

WARNING:
The control unit must be connected to the EMERGENCY STOP power circuit, i.e. when an EMERGENCY STOP takes place, the axis brake is activated, and the control unit will be switched off!

- Assembly and fitting of electric devices may only be done by an electrics specialist!
- For trouble-free operation with high data transmission rates, a clear grounding concept is mandatory. A uniform grounding potential is a prerequisite for this!
- Exclusively screened cables are to be used for the wiring! The cable shield must be connected largely at both ends to the ground!

WARNING:
Both ends of the cable shield must be connected generally, or as often as possible to the ground, otherwise malfunctions can occur! Furthermore, the reliability of the unit and the normal processing procedure could be reduced!

Setting the system parameters

The OptiMove CR07 Axis control unit is adapted with the system parameters to the axis type and the plant-specific characteristics.

In order to set the system parameters, proceed as follows:

1. To enter the system parameter mode, press and hold the key for 5 seconds. The LEDs **L1-L3** illuminate
2. Select the desired parameter **P1-P12** on the display **A1** by using the keys
3. Set the corresponding parameter values on the display **A2** by using the keys

4. Press the key, in order to exit the system parameter mode

System parameters - overview

Name	Description	Values	Remark
P1	Upper stroke limit	0.00 - 5.00 m **0.30 m**	
P2	Operating mode	**1 - Pendulum operation** 2 - Sequence program 3 - Semiautomatic pendulum operation 4 - X-GunClean sequence program	
P3	Acceleration	0.10 - 2.00 m/s^2 **1.50 m/s^2**	Horizontal axis 0.10 m/s^2
P4	max. speed	0.08 - 0.60 m/s **0.60 m/s**	Horizontal axis 0.10 m/s
P5	Open loop gain	10 - 100 **40**	
P6	Adaptation of incremental pulse generator	10 - 1500 pulses/cm **750**	for Horizontal axis with serial number (see Rating plate): 18401.xxxx = **1012** (displayed as .0.1.2) 18402.xxxx = **940**
P7	Holding brake delay time	0 - 500 ms **100**	
P8	Communication	**0 - Digital Bus Error = 1** 1 - CAN Open 2 - Digital Bus Error = 0	from software version 1.06
P9	Keyboard lock	**0 - Keyboard lock inactive** 1 - Keyboard lock active	Activate keyboard lock by signal Remote = 1 Exception: Start, stop, axes referencing, error acknowledgement, preset value display
P10	Referencing mode	**0 - Proximity switch** 1 - Running into end buffer	ZA06 and XT11 are referenced with proximity switch
P11	CAN Baud rate	0 - 7 **3 - 125 kBit/s**	
P12	CAN-Node ID	0 - 127 **1**	

Default values are marked by **bold** print

WARNING:
If an incorrect system parameter is set, this can lead to damage to the axes and/or the booth!

System parameter P1: setting the upper stroke limit

If the axis control unit operates with a Gema axis, all system parameters are already set to the values for this axis. The only system parameter to be set is the upper stroke limit.

The maximum stroke height (max. travel) is limited by the upper stroke limit. The maximum stroke height is limited by the corresponding height of the used reciprocator or by the maximum height of the gun slots in the booth. The upper stroke limit of the OptiMove CR07 Axis control unit is always set at 0.3 meters by the factory.

In order to set the upper stroke limit (system parameter 1), proceed as follows:

1. To enter the system parameter mode, press and hold the key for 5 seconds.
   The LEDs **L1-L3** illuminate
2. Select the parameter **P1** on the display **A1** by using the keys
3. Set the upper stroke limit value on the display **A2** using the keys

WARNING:
Always pay attention to the gun positions and the maximum height of the gun slots in the booth! If an incorrect (too high) stroke limit is set, this can lead to damage to the axis and/or the booth!

4. Press the key, in order to exit the system parameter mode

Operation

Operating the axis control unit

Up to 255 programs can be entered and/or recalled with the OptiMove CR07 Axis control unit. Each program contains data about the speeds and the positions of the axis movements.

Switch on/off the axes control unit

1. Press the on key
   The LED above the key illuminates

By first switch on of the equipment, the preselected factory settings are displayed:

xxx on the display **A1** = value for position

xxx on the display **A2** = value for speed

xxx on the display **A3** = program number

2. Press the off key
   The device is switched off

By switching off the equipment (also when the equipment is disconnected from the mains), the actual settings are retained.

Travel to reference point

In order that the OptiMove CR07 axes control unit can enter the position of the axis as accurately as possible during operation, the triggered axis must first travel to the reference point each time it is switching on. The prerequisite for this is that the reference point is already set correctly (see also the corresponding instructions in the respective axis operating manual).

NOTE!
The axis must also be referenced again after each axis-specific error (H01, H02, H03, H04). If the axis is referenced, it can not be referenced a second time unless the above conditions are given!

1. Press the on key
   The OptiMove control unit is switched on.

The blinking LED of the key indicates that reference point travel has not been carried out yet.

2. Press the key
   The control unit starts the reference travel

3. At the end of the reference travel, the LED of the key expires and the axis is referenced

NOTE!
If the axis can collide somewhere, or the guns are incorrectly mounted, or the lower reversing point is situated too low, the axis can be stopped by pressing the key. By pressing the key again, the reference travel will continue.

The procedure described above relates to the reference point traveling in manual operation. In the automatic operation mode, the reference point traveling is triggered with ID no. 7 by the DigitalBus, and with the corresponding command by the CAN bus.

Start/stop the axis

1. Switch on the axis control unit (see also "Switch on/off the axis control unit")
2. If necessary, change to another program (see also "Program change")
3. Press the key.
   The axis is started, and the selected program is activated. The corresponding LED illuminates
4. Press the key.
   The axis is stopped
   - The display **A1** shows the actual axis position. The corresponding LED remains unlit

Program change

The program change can be done by keyboard (manually) or through external control signals. In addition, a program change can be made either during operation or at a standstill. In both cases the modifications are stored in the program memory, i.e. after restarting the OptiMove control unit, the last entered axis programs are available again.

NOTE!
If a program change is made during operation, the axis terminates the old command, which is still in the memory, and takes over the new program (positions or speed) by the next cycle change!

1. Select the desired program number using <P> keys
   - The LED illuminates for 3 seconds and then deletes, i.e. the program change has been accepted. The new program number is shown on the display **A3**
   - The display **A1** shows the axis position. The corresponding LED remains unlit
   - The display **A2** shows the axis speed. The corresponding LED remains unlit

Displaying the cycle time

Only possible in pendulum mode / semiautomatic mode!

1. Start the axis (see also "Start/stop the axis")
2. Press < > in the display area **A2** and keep it pressed. The display **A2** shows the cycle time of the actual program sequence in seconds (from 00.0 to 99.9). If the axis is restarted, then the cycle time 00.0 seconds is displayed. Only when a cycle (whole pendulum movement) has been traveled, the measured cycle time is shown and updated after each further cycle (pendulum movement)
3. Read off the cycle time and use it in the program for the calculation of the optimal sine curve

Edit programs

In the **Edit** program mode, the input parameter values can be selected or changed.

NOTE!
All program data must be determined. Therefore, use the program tables in the appendix of this operating manual!

The programs can be edited during operation and also at a standstill.

NOTE!
If the system parameter P2 is set to "2" or "4", editing is only possible at a standstill!

In both cases the modifications are stored in the program memory, i.e. after restarting the OptiMove CR07 Axis control unit, the last entered program values are available again.

NOTE!
If a program is edited during operation, the axis terminates the old command, which is still in the memory, and takes over the new program values by the next cycle change!

NOTE!
The input mode is locked in Remote operating mode!

Axes operating modes

General information

The OptiMove CR07 Axis control unit is universally used for all Gema axes. To be ideally equipped for all conditions, the operating mode can be set in the system parameter mode **P2**. The following axes operating modes can be selected:

- Pendulum operating mode
- Sequence program
- Semiautomatic pendulum operating mode
- X_GunClean sequence program

In the following chapter, the different axis operating modes are described in detail.

Pendulum operating mode

In the pendulum operation mode, the axis executes a continuous stroke movement according to the set parameters. With the keyboard, the different values as well as the start and stop functions can be set in a user-friendly way. The operator can read the set and current data directly on the display. To be equipped for all operating processes, up to 255 different programs can be stored.

NOTE!
The system parameter P2 must be set on 1 (pendulum operating mode)!

The equipment is operated by the operating panel. The following possibilities are available:

- Referencing axes
- Start/Stop
- Edit programs
- Program change
- Select Input mode/display mode
- Acknowledgement of error messages

Editing/setting

1. Select the desired program number using <P> keys (see also "Program change").
   The display **A3** shows the program number
2. Press the sel key:
   The LEDs in the display area **A1** and **A2** and the LEDs and illuminate green
3. Input the desired value for the upper reversing point on the display **A1** using the keys
4. Input the desired value for the lower reversing point on the display **A2** using the keys

NOTE!
If a same value is selected for the input of the upper and the lower position, this results in a positioning command, i.e. the axis stops in this position!

5. Press the sel key again:
   LEDs and illuminate green
6. Input the desired value for the speed upwards on the display **A1** using the keys
7. Input the desired value for the speed downwards on the display **A2** using the keys
8. Press the sel key again, or press or or , in order to exit the **Editing** mode

Sequence program

A sequence program is created by joining a number of individual program steps. The program steps are then processed in a certain order. A sequence program can consist of a single program step, if only one position is to be approached, e.g. when positioning the X axis.

NOTE!
The prerequisite for the programming of sequence programs is that the system parameter P2 is already set correctly P2=2 (see also "Setting the system parameters")!

Structure of a program step (procedure step)

Display	Input parameter	Input range
	Travel position [m]	0.00 - P_max. (P_max. is set with system parameter **P1**)
	Speed [m/s]	0.08 - V_max. (V_max. is set with system parameter **P4**)
t	Dwell time (in the travel position) [sec.]	0 - 5.00
nP	Following program address	0 - 255
Display A3	Program number	1 - 255

1. Select the desired program number using < P > keys (see also "Program change").
   The display **A3** shows the program number
2. Press the sel key:
   LED illuminates green. The LED in the display area **A1** illuminates green too. The display **A2** remains dark
3. Input the desired value for the desired position on the display **A1** using the keys < >
4. Press the **Select** key again:
   LED illuminates green
5. Input the desired speed value on the display **A1** using the keys < >
6. Press the **Select** key again:
   LED illuminates green
7. Input the desired dwell time value on the display **A1** using the keys < >
8. Press the **Select** key again:
   LED nP illuminates green
9. Input the address of the following program on the display **A1** using the keys < >
   0 = no further program step
10. Press the sel key again, or press or or , in order to exit the **Editing** mode

Programming example - positioning

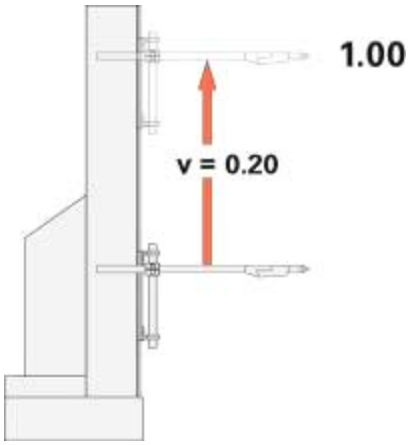

	Program no. 1
Display	**Input value**
	1.00 m
	0.20 m/s
t	0 s
nP	0

Programming example - pendulum movements

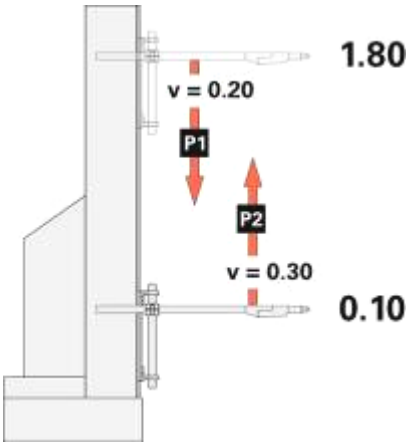

	Program no. 1	Program no. 2
Display	**Input value**	**Input value**
	0.10 m	1.80 m
	0.20 m/s	0.30 m/s
t	0 s	0 s
nP	2	1

Programming example with path-time diagram

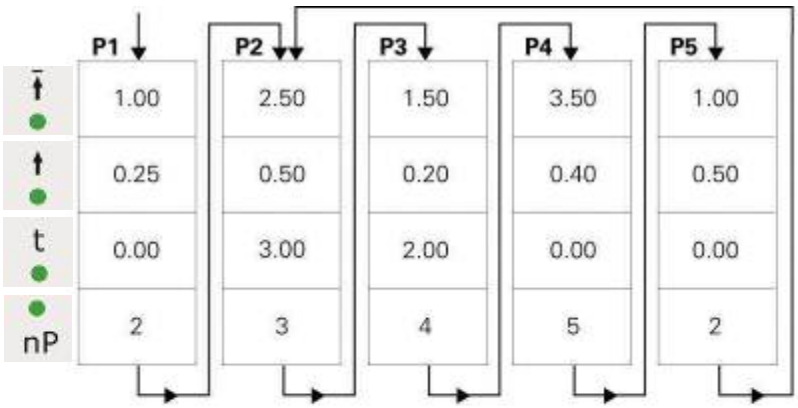

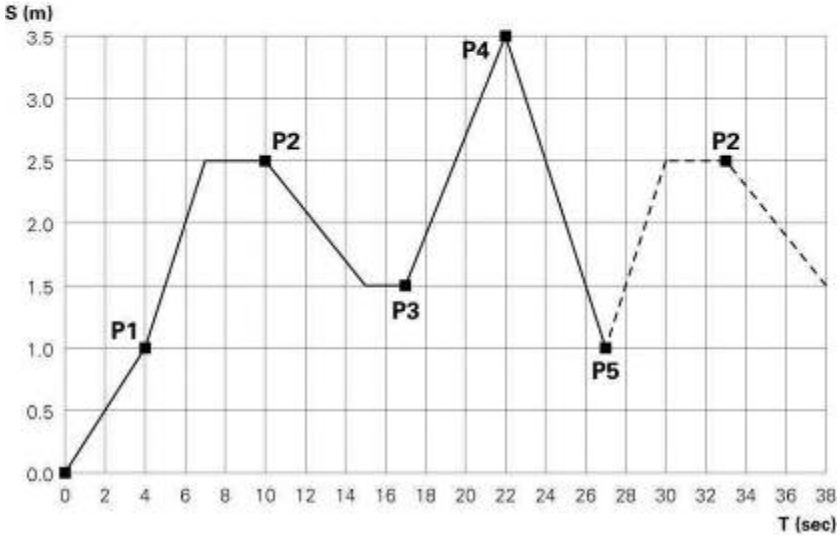

Semiautomatic pendulum operating mode

Basically, the semiautomatic pendulum operating mode operates in the same way as the standard pendulum operating mode. However, the axis can be started or stopped by a control signal. In this operating mode, the pendulum movement is completely executed and the travel stops at the lower reversing point. Thereby, a sequence control with object recognition and "Axis start/stop" can be realized in a simple way.

NOTE!
The system parameter P2 must be set on 3 (semiautomatic pendulum operating mode)!

The start release takes place by pin 3 at plug **2.1 Power IN** or the parallel interface at plug **2.4** (for more details, see section "Pin allocation"). During operation, the axis cannot be stopped with the stop key.

Only a limited operation is possible by the operating panel, namely:

- Referencing axes
- Program editing when axis is moving
- Program change when axis is moving
- Input mode/display mode selection (preset values and actual values visualization)
- Error messages acknowledgement

The program editing requires the same procedure as in the standard semiautomatic operating mode.

Sequence program X_GunClean

The X_GunClean sequence program is based in terms of function and operation on the sequence program. This program is used to execute a gun cleaning with the X axis. The programs 1-253 allow to travel to different positions. Thereby, the digital output 2 always remains on **low**. The programs 254 and 255 actuate the digital output 2 (see graph). The operator has now the possibility to trigger a gun cleaning with these two positions.

NOTE!
The system parameter P2 must be set on 4 (X_GunClean)!

P2 = 4 - X-GunClean Sequence program

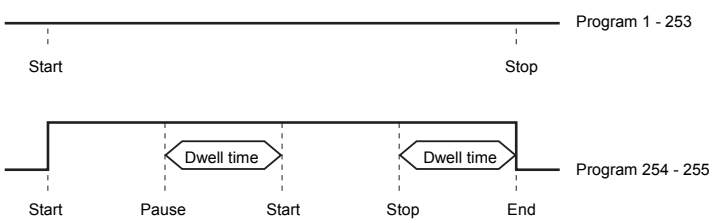

The program editing requires the same procedure as in the sequence program.

Setup

If an object is hanging in the booth, it is very advantageous if the upper and lower reversing point (or travel positions in sequence programs) can be directly taken from the object to be coated in a Teach-In procedure. The program parameters of the present program can be set, and the axis travels with this modification. It is also possible to select the program number.

Setup mode by keyboard (pendulum operating mode / semiautomatic mode)

1. Press the sel and key at the same time.
   The corresponding LED blinks
2. Press in the display area **A1**, in order to start the axis
   - **LED 1** blinks
   - Axis travels to the upper reversing point
3. Adjust the upper reversing point on display **A1** using the keys
   - Axis travels with the modification
   - The position of the upper reversing point is programmed
4. Press in the display area **A2** in order to start the axis
   - **LED 2** blinks
   - Axis travels to the lower reversing point
5. Adjust the lower reversing point on display **A2** using the keys
   - Axis travels with the modification
   - The position of the lower reversing point is programmed
6. Select the desired program number using < P > keys. The display **A3** shows the program number
7. Press the key, in order to exit the setup mode

Setup mode by keyboard (sequence program)

1. Press the sel and key at the same time.
   The corresponding LED blinks
2. Press in the display area **A1**, in order to start the axis
   - The axis travels to the position of the first program step
3. On the display **A1**, adjust the positions using the keys
   - **LED 1** blinks
   - Axis travels with the modification
   - The position of the first program step is programmed

4. Press to select the next program step
   - Display **A3** shows - - -
5. Select the desired program number using < P > keys. The display **A3** shows the program number
6. Repeat the steps 2-5 for further programs
7. Press the key, in order to exit the setup mode

RAM reset

In the RAM reset mode, all preset values and system parameters are loaded with default values.

Entering the RAM reset mode

1. Switch off the axis control unit by pressing off
2. Keep pressed the key, and at the same time switch on the axis control unit with on. Keep pressed the key for further 10 seconds.
   The value **255** appears on the display **A3**, and the LED **L3** blinks. All other displays remain dark
3. Press the key, in order to exit the RAM reset mode

Default values after RAM reset

Name	Default value
Preset values	
Upper position (m)	**0.30**
Lower position (m)	**0.00**
Speed upwards [m/s]	**0.20**
Speed downwards [m/s]	**0.20**
System parameters	
P1 - Upper stroke limit (also applied as travel position for horizontal axis)	**0.30**
P2 - Operating mode	**1**
P3 - Acceleration [m/s^2]	**1.50**
P4 - Max. speed [m/s]	**0.60**

Name	Default value
P5 - Open loop gain	**40**
P6 - Incremental pulse generator adjustment [pulse/cm]	**750**
P7 - Compensation of holding brake delay time [ms]	**100**
P8 - Communication	**0**
P9 - Keyboard lock	**0**
P10 - Referencing mode	**0**
P11 - CAN-Baud rate	**3**
P12 - CAN-Node ID	**1**

NOTE!
These default values are valid from software version V1.10!

DigitalBus parallel interface

Overview

The axis control unit is connected to a superordinated control unit (e.g. PLC) with the DigitalBus. The DigitalBus has a 17 bit parallel interface. The interface comprises 15 digital inputs and 2 digital outputs. The digital inputs are subdivided into a data bus, consisting of 12 bits and a control bus, consisting of 3 bits. The digital outputs consist of the error message bit and the program active bit.

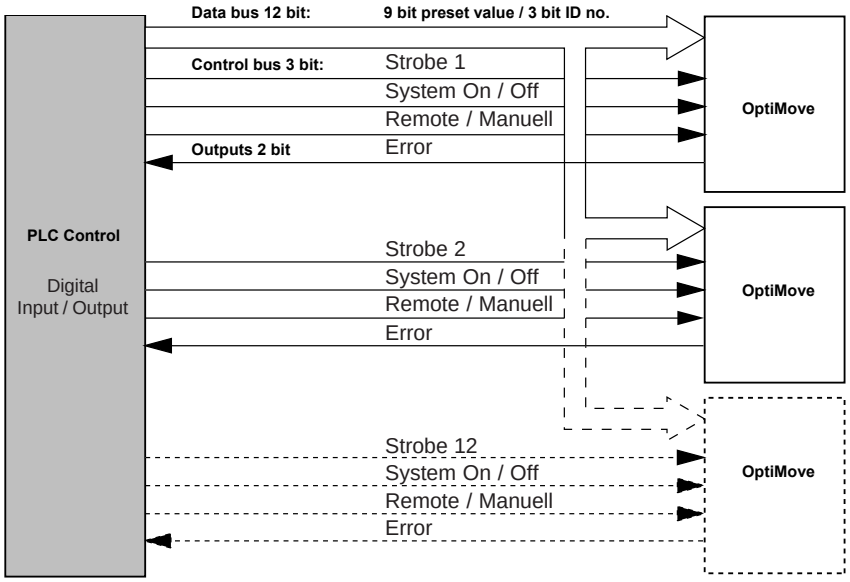

Controlling by superordinated control unit

16 bits parallel bus structure

D8	D7	D6	D5	D4	D3	D2	D1	D0	A2	A1	A0	Remote	System	Strobe	Error	Program active
Value									Command			Input			Output	Output
Data												Control			Status	

Data bits (Data)

The data bus width is 12 bits. The first 9 bits are used to transfer the data for the different operating parameters to the control unit. The data for the corresponding preset values are assigned with an identification number, consisting of 3 bits.

Control bits (Control)

For inputs, there are 3 control bits available:

- **Axis Start** - Start/Stop axis
- **Strobe** - Data transfer activation
- **Remote** - Operating mode

Status bits (Status)

For outputs, there are 2 status bits available:

- **Error** - Axis not referenced
- **Program active**

Status bit 1:

Status bit 1 has assigned two functions:

1. After switching on, an impulse of 0.1 s is present, that means, the axis has to be referenced:

   OptiMove ON 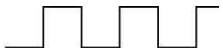

2. The composite error message indicates all errors which are present in the control unit. Error function according to system parameter **P8**:

   P8=0 - Error 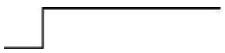

   P8=2 - Error 

Status bit 2:

Status bit 2 indicates the operating status of the axis. The following diagram shows how the output reacts in the different operating modes:

P2 = 1 Pendulum operating mode

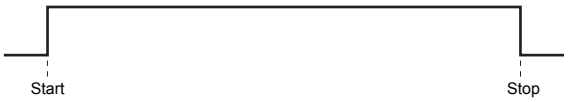

P2 = 2 sequence program

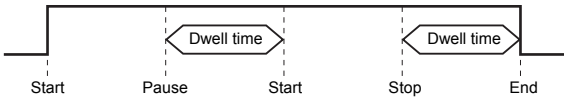

P2 = 3 Pendulum operating mode semiautomatic

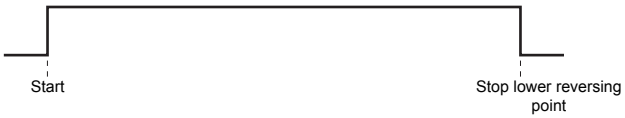

P2 = 4 X-GunClean Sequence program

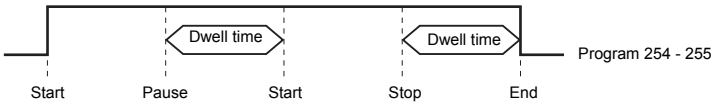

NOTE!
By traveling to a reference point, the output always remains on "low"!

Command table and value ranges

Command code A0:A2	Designation	Value range	Unit	Resolution	Pendulum operation P2=1 P2=3	Sequence program P2=2 P2=4
0	Upper position	0.00 - 5.00	m	0.01	X	X
1	Lower position	0.00 - 5.00	m	0.01	X	X
2	Speed upwards	0.08 - 0.60	m/s	0.01	X	X
3	Speed downwards	0.08 - 0.60	m/s	0.01	X	
4	Dwell time	0 - 5.00	s	0.01		X
5	Following program address	0 - 255	-	1		X
6	Program no.	1 - 255	-	1	X	X
7	Start travel to reference point	0 - 1	-	1	X	X

X = is used in the respective mode

NOTE!
If a program is edited during operation, the axis terminates the old command, which is still in the memory, and takes over the new program values by the next cycle change!

NOTE!
If the system parameter P2 is set to "2" or "4", editing is only possible at a standstill!

Control sequence

Control sequence for program number change (identification number 6)

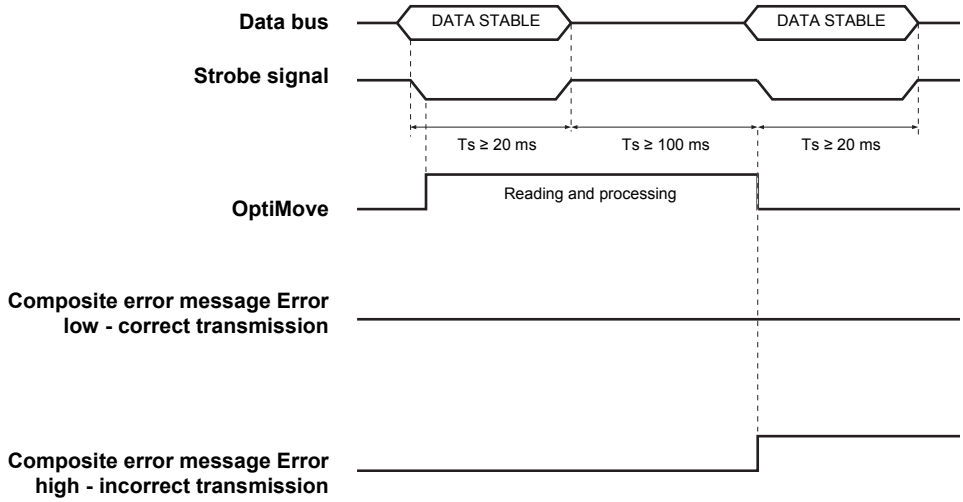

Control sequence for program parameter (identification numbers 0-5)

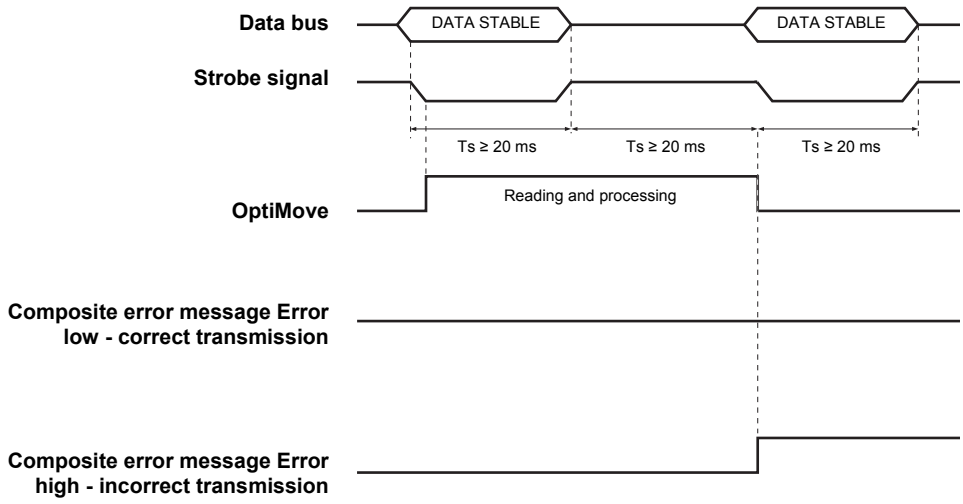

Data transfer

The data transfer from the data bus is initiated by a negative flank of the **Strobe** control signal.

The Data bus is read in for data validation 3 times and the results compared, after every negative **Strobe** flank. If an error occurs, the digital output **Error** is set at **high** and the error message **H30** is shown on display **A3**.

Software description

For each OptiMove Axis control unit, one strobe signal and one error signal exists. The data signals and the identification number signals are used in common for all OptiMove control units. The OptiMove control unit takes over the data with the negative flank of the strobe signal.

Explanation:
The simultaneous transmission of identical data to all OptiMove units only occurs on the negative flank of all strobe signals.

Example of a PLC program:

Program procedure diagram

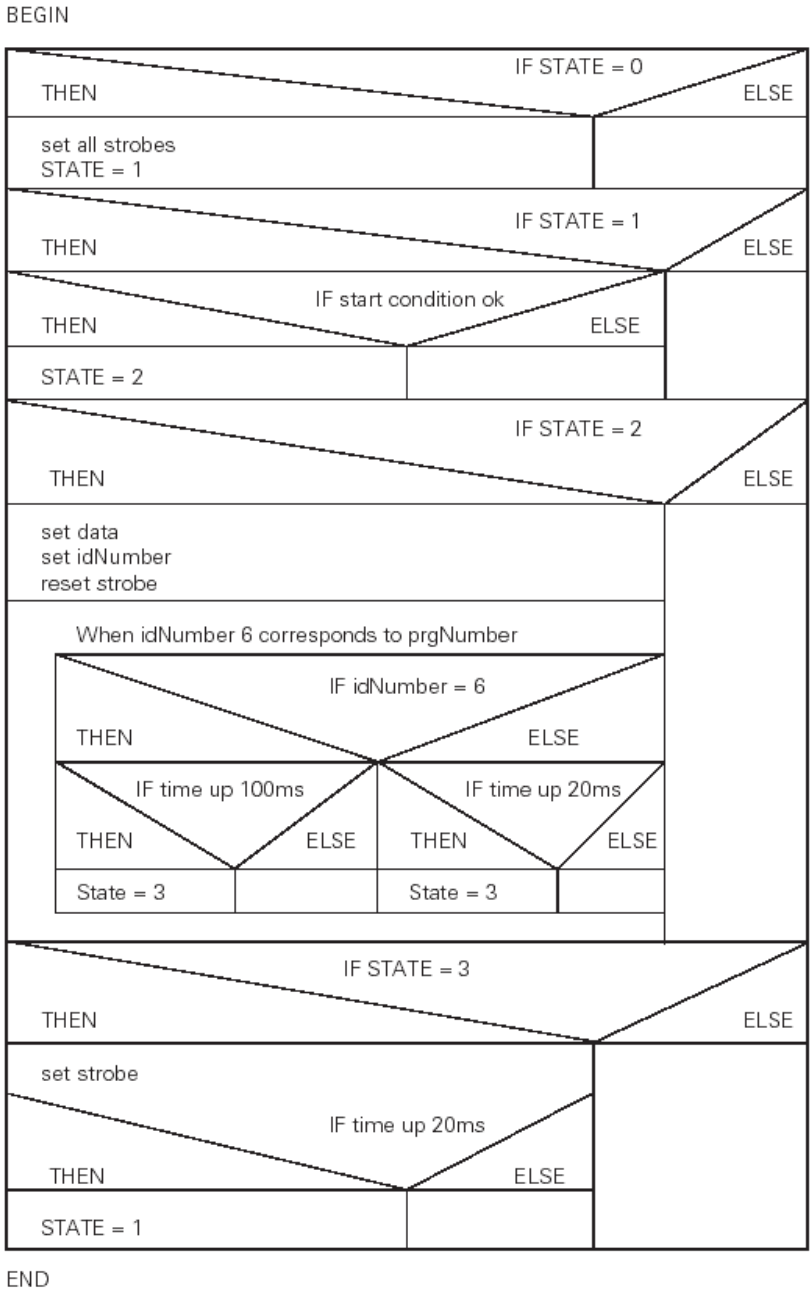

Digital Connector CD02 with connection designations

The interface between the OptiMove CR07 Axis control unit and the PLC is given by the Digital Connector CD02. All parallel interface signals of up to 12 devices are fed connection-friendly on plugs.

The exact plug assignment for the connection to the PLC is evident in the following illustration:

X5	X4	X3	X2	X1
1-12 Strobe	1-12 D8	1-12 Prog. aktiv	1-8/13-20 D0-D7	1: GND
13-24 Start axis	13-24 Remote/Man.	13-24 Error/not referenced	9-11/21-23 A0-A2	2: +24 VDC
				3: PE

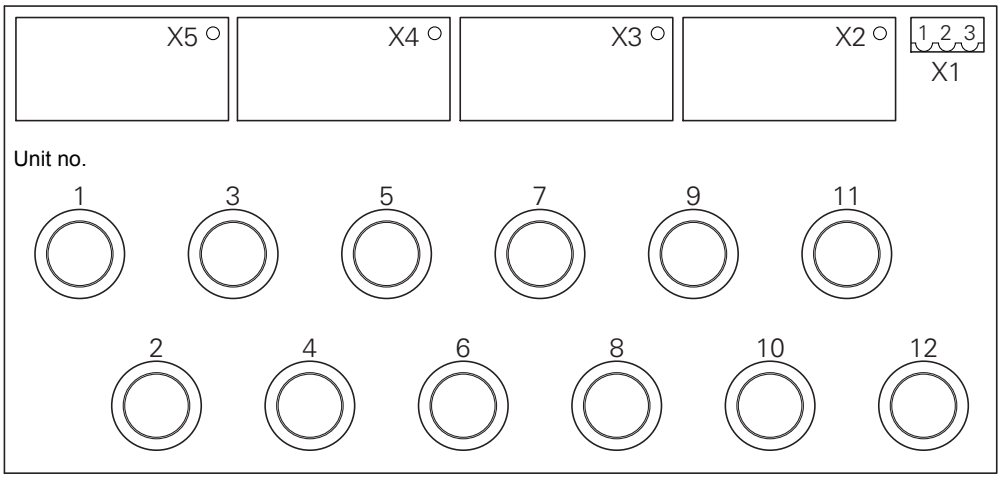

Digital Connector CD02

CAN bus

General information

The OptiMove CR07 Axis control unit is fitted with a CAN bus interface as standard, and can be operated as a simple CANopen slave in a network with a central control unit (Master).

The communication between the users in the network takes place by CAN bus, therefore each existent component must be classified with an individual user address (Node-ID = identification number). The allocation is described in the section "Setting the user address (ID number)". The transmission speed setting is determined by adjusting the Baud rate (see therefore "Setting the Baud rate").

Hardware

The OptiMove control units are connected to the central PLC control unit with 4 pin CAN bus cables. The last bus client is fitted with a terminal plug with terminal resistor in order to terminate the network correctly. A maximum of up to 125 users can be connected in a network.

CAN bus cable - plug assignment

Pin	Signal	Color
1	GND	white
2	+24 VDC	black
3	CAN H	black
4	CAN L	black

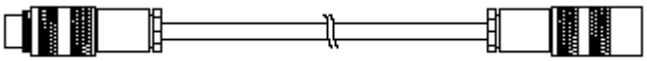

CAN bus cable

Setting the user address (ID Number)

1. To enter the system parameter mode, press and hold the key for 5 seconds. The LEDs **L1-L3** illuminate
2. Select the parameter **P12** on the display **A1** by using the keys
3. Select an address between **1** and **127** on the display **A2** using the keys
4. Press the key, in order to exit the system parameter mode

WARNING:
The selected address in the system parameter P12 may never be "0", the address must be unique and may not conflict with the numbers of other existing users!

Setting the Baud rate

1. To enter the system parameter mode, press and hold the key for 5 seconds. The LEDs **L1-L3** illuminate
2. Select the parameter **P11** on the display **A1** by using the keys
3. Select a value between **0** and **7** on the display **A2** using the keys

Set value - P11	CAN Baud rate
0	20 kBit/s
1	50 kBit/s
2	100 kBit/s
3	**125 kBit/s (Default)**
4	250 kBit/s
5	500 kBit/s
6	800 kBit/s
7	1 Mbit/s

The Baud rate is selected with 125 kBits as default. This setting permits a maximum cable length of approx. 500 m from the first to the last CAN bus client. If longer cables are used, select a lower Baud rate.

4. Press the key, in order to exit the system parameter mode

Fault remedying

General information

All error messages are displayed as an error code (**H01-H99**) on the seven segment display **A3** (instead of the program number).

If an error occurs in the system, the cause must be eliminated first, before further operation is possible.

If the cause has been eliminated, this must be acknowledged by pressing the < P > keys.

Number	Description	Action
Axis		
H01	Upper end stop (system parameter P1) overrun	Emergency stop Axis can only travel downwards Axis must be referenced again
H02	Tracking error too large	In order to prevent a larger tracking error, the speed must be reduced.
H03	Encoder cable break	Emergency stop Axis must be referenced again
H04	Wrong encoder rotating direction	Emergency stop Axis must be referenced again
H05	Desired travel position is larger then the defined end position (system parameter P1)	Travel position must be limited according to SP1
H06	Lower end stop overrun	Emergency stop Axis can only travel upwards Axis must be referenced again
H07	Proximity switch signal is permanent active during the reference travel	Referencing not successful
H08	No proximity switch signal during the reference travel	Referencing not successful
H09	Speed value larger than system parameter P4	Limit speed according to system parameter P4
H10	Axis position not correctly stored during switching off	Axis position = Upper end stop. Axis can only travel downwards.
H11	Frequency converter error	Emergency stop
H12	Axis cannot be started, because not referenced	

Number	Description	Action
H13	Axis cannot be referenced, because already referenced	
H15	Parameter input in sequence program not possible, because program is running	
H16	Axis cannot be started during reference travel	
Hardware		
H20	24 VDC supply voltage too high (26.5 VDC)	Stop axis (soft stop)
H21	24 VDC supply voltage too low (20.8 VDC)	Emergency stop Store axis position, current program number and axis status Stop the system
H23	EEPROM content invalid	Load factory configuration
DigitalBus		
H30	Data validation error	Reject data
H31	Data outside the value range	Reject data
H32	Data reception overflow	Reject data
CAN bus		
H40	Permanent CAN bus error (BUS_OFF), i.e. no power supply or cable is not connected	
H41	Too many errors during sending (ERROR_PASSIVE)	
H42	Overflow on data reception	
H43	Overflow on transmission	
H44	Master failed	Stop axis (soft stop)
H45	Data outside the value range	Reject data
H46	Invalid Node ID set	Node ID = 127

Hardware

Pin allocations

Plug 2.1 - Power IN

Pin	Function
1	Neutral conductor
2	Phase (230 VAC)
3	Axis start (230 VAC)
PE	Ground

Plug 2.2 - Drive supply

Pin	Function
1	Neutral conductor
2	Phase
3	Not connected
PE	Ground

Plug 2.3 - Drive I/O

Pin	Function
1	GND frequency converter
2	24 V frequency converter
3	Frequency converter error
4	RPM preset value
5	Motor right running (UP)
6	Motor left running (DOWN)
7	Reserve
8	Reserve
9	24 VDC OptiMove
10	Motor brake
11	Proximity switch
12	Reserve
13	B+
14	B-

Pin	Function
15	A-
16	A+
17	O+
18	O-
19	GND OptiMove
Enclosure	Shield

Plug 2.4 – Aux DigitalBus parallel interface

Pin	Bit	Function
A	D0	Preset values, program no. Binary value 1
B	D1	Preset values, program no. Binary value 2
C	D2	Preset values, program no. Binary value 3
D	D3	Preset values, program no. Binary value 4
E	D4	Preset values, program no. Binary value 5
F	D5	Preset values, program no. Binary value 6
G	D6	Preset values, program no. Binary value 7
H	D7	Preset values, program no. Binary value 8
I	A0	Identification number Binary value 1
K	A1	Identification number Binary value 2
L	A2	Identification number Binary value 3
M	12 IN	Axis_Start
N	13 IN	Strobe (data transfer from data bus)
O	14 IN	Remote/manual
P	D8	Preset values, program no. Binary value 9
R	GND_External	GND
S	1 OUT	Error, axis not referenced
T	2 OUT	Program_Active
U	24VDC_Extern	24 VDC digital outputs
Enclosure	Shield	Shield

Plug 2.5 - CAN bus IN

Pin	Function
1	GND
2	24 VDC
3	CAN_H
4	CAN_L
Enclosure	Shield

Plug 2.6 - CAN bus OUT

Pin	Function
1	GND
2	24 VDC
3	CAN_H
4	CAN_L
Enclosure	Shield

Spare parts list

Ordering spare parts

When ordering spare parts for powder coating equipment, please indicate the following specifications:

- Type and serial number of your powder coating equipment
- Order number, quantity and description *of* each spare part

Example:

- **Type** OptiMove CR07
  Serial number 1234 5678
- Order no. 203 386, 1 piece, Clamp - Ø 18/15 mm

When ordering cable or hose material, the required length must also be given. The spare part numbers of this bulk stock is always marked with an *.

Wearing parts are always marked with a **#**.

All dimensions of plastic hoses are specified with the external and internal diameter:

Example:

Ø 8/6 mm, 8 mm outside diameter (o/d) / 6 mm inside diameter (i/d)

WARNING!
Only original Gema spare parts should be used, because the explosion protection will also be preserved that way! The use of spare parts from other manufacturers will invalidate the Gema guarantee conditions!

OptiMove CR07 – Front plate and power pack

	OptiMove CR07 Axis control unit - complete	**1010 550**
	Front plate - complete (pos. 1-13)	1010 540
	Front plate with foil keyboard (pos. 1-6)	1010 539
1	Front frame - complete (incl. pos. 1.1)	1007 048
1.1	Special screw	1007 019
2	Special screw – M4x20/7 mm	1003 000
3	Front plate gasket	1007 042
5	Screw – M4x6 mm	221 767
6	Toothed lock washer – Ø 5.3/106x0.6 mm	1002 999
7	Display - complete	1010 293
8	Spacer sleeve – Ø 3.4/6x6.5 mm	1001 925
9	Spacer sleeve - Ø 3.6/7x5 mm	247 758
10	Main board V1.0 – complete	1010 290
10.1	EPROM - program version V x.x (current software)	1000 610
11	Spacer	263 508
12	Locknut - M3	262 498
13	Washer - Ø 3.2/7x0.5 mm	201 944
14	Power pack - 24 VDC	1009 849

OptiMove CR07 – Front plate and power pack

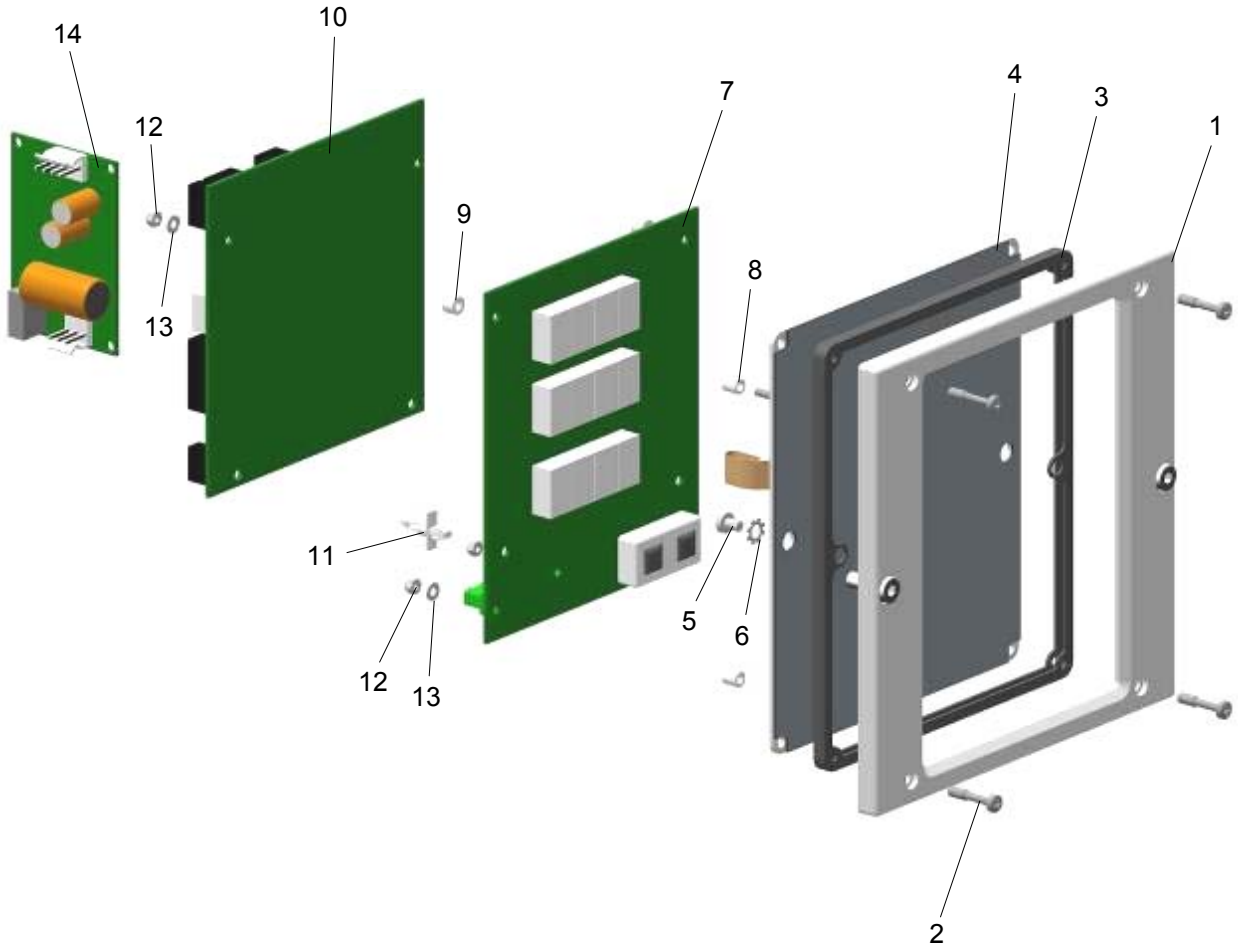

OptiMove CR07 – Front plate and power pack

OptiMove CR07 – Rear panel

1	Rear panel gasket	1007 033
2	Relay socket	251 135
3	Relay – 24 VDC/10 A, 2UK	1002 915
4	Freewheeling diode for relay	258 075
5	Safety strap for relay socket	1001 063
6	Fuse holder	200 131
7	Fuse - 10 AT	200 174
8	Dust protection cap for connector socket	265 446
9	Dust protection cap for plug	265 438
10	Cap screw - M4x16 mm	216 801
11	DigitalBus connection - complete	1000 284
12	Reciprocator control signals connection - complete	1010 739
13	CAN bus IN connection - complete	387 541
14	Connection to axis power supply – complete	1010 740
15	CAN bus OUT connection - complete	387 550
	Mains cable for ZAxx – L=20 m	1000 280
	Signal cable for ZAxx – L=20 m	1000 281

Optional features (not shown)

CAN bus cable 0.50 m	1002 655
CAN bus cable 4.50 m	387 592
CAN bus cable 5.50 m	388 521
CAN bus cable 6.50 m	388 530
Bus terminal resistor	387 606
CAN hub - complete	1001 787
Digital Connector CD02 (CR07-PLC interface)	382 825
Digital cable 19 pins - 1.50 m	1001 500
Digital cable 19 pins - 3.50 m	1000 933
Digital cable 19 pins - 4.50 m	1000 934
Digital cable 19 pins - 5.50 m	1000 935
Digital cable 19 pins - 6.50 m	1000 936

OptiMove CR07 – Rear panel

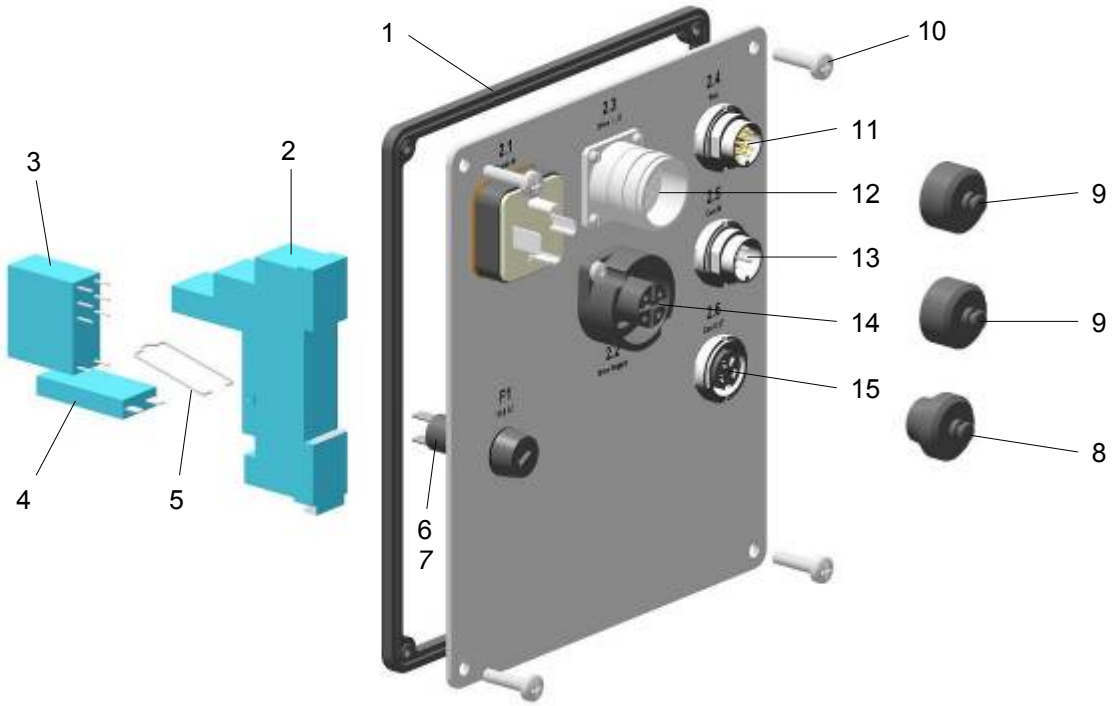

OptiMove CR07 – Rear panel

Appendix - program table

P					t	nP
1						
2						
3						
4						
5						
6						
7						
8						
9						
10						
11						
12						
13						
14						
15						
16						
17						
18						
19						
20						
21						
22						
23						
24						
25						
26						
27						
28						
29						
30						
31						
32						
33						
34						
35						

P					t	nP
36						
37						
38						
39						
40						
41						
42						
43						
44						
45						
46						
47						
48						
49						
50						
101						
102						
103						
104						
105						
106						
107						
108						
109						
110						
111						
112						
113						
114						
115						
116						
117						
118						
119						
120 X	position					

P					t	nP
131						
132						
133						
134						
135						
136						
137						
138						
139						
140						
141						
142						
143						
144						
145						
146						
147						
148						
149						
150						
201						
202						
203						
204						
205						
206						
207						
208						
209						
210						
211						
212						
213						
214						
215						

P					t	nP
216						
217						
218						
219						
220						
221						
222						
223						
224						
225						
226						
227						
228						
229						
230						
231						
232						
233						
234						
235						
236						
237						
238						
239						
240						
241						
242						
243						
244						
245						
246						
247						
248						
249						
250						