E

Operating Instructions and Spare Parts List

OptiMove 2 Powder Reciprocator Control for Reciprocators with AC Motors

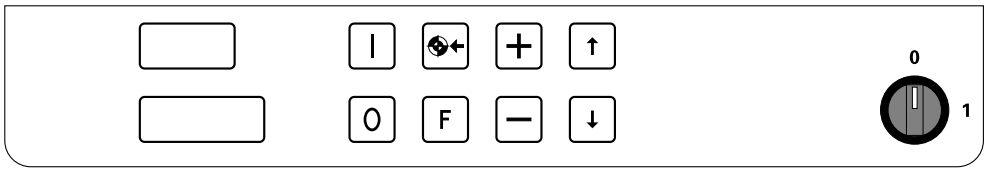

TWGema

Issued 06/00

Table of contents

(continued)

Table of Contents (continued)

Issued 06/00

Safety regulations

1. The OptiMove 2 Powder Reciprocator Control should only be switched on and operated **after** these Operating Instructions have been read through thoroughly.
   Incorrect operation of the OptiMove 2 Control can lead to accidents, malfunctions and/or damage to the equipment.

2. **ATTENTION! The power of the reciprocator motor is very much greater than that of a human!**
   All axes must be protected from access during operation (see local safety regulations).
   If the Reciprocator Control switches off, the carriage can slowly sink to the Zero point, also by stillstand of the carriage, therefore, never stand under the carriage!

3. The plug connections between the OptiMove 2 Reciprocator Control, the frequency converter, and the Reciprocator should only be disconnected when the OptiMove 2 Reciprocator Control is switched off.

4. The connecting cables between the frequency converter and the Reciprocator must be laid out so that during operation the axis cannot be damaged.
   Observe local safety regulations!

5. The upper stroke limit must always be set within **the height of the Reciprocator**. If an incorrect stroke limit is set (too high) this can lead to damage to the Reciprocator and/or the Booth!

6. When repairs are carried out on the Reciprocator, the OptiMove 2 Reciprocator Control, and the power supply must always be disconnected from the Mains according to local safety regulations!

Issued 06/00

Technical Data
OptiMove 2 Powder Reciprocator control

Number of axes per module :		1
Number of axes per control unit :		1
Maximum available programs :		64
Max. stroke height (Theoretical) :		9.999 m.
Positioning error :		< 1 mm.
Maximum speed :		0.6 m/s.
Minimum speed :		0.05 m/s.
Acceleration :		1.5 m/s^2.
Voltage range selection :		100V*, 110V, 120V, 200V*, 220V, 230V, 240V (*Configuration changes to the PS 1 Power supply are necessary).
Voltage tolerances :		±10 %
Frequency :		48 - 62 Hz
Fuses :		100 - 120V : F1, F2 = 10A (slow), F3 = 500 mA 200 - 240V : F1, F2 = 5A (slow), F3 = 250 mA
Power consumption :		30 W (OptiMove 2 Control unit without the power supply)
Operating temperatures :		0 °C to +40 °C (+32 °F to +104 °F)
Storage temperatures :		-20 °C to +70 °C (-4 °F to +158 °F)
Type of protection :		IP 54
Dimensions :	Width :	425 mm
	Depth :	270 mm
	Height :	88 mm
	Weight :	6.2 kg

Issued 06/00

1. OptiMove 2 Powder Reciprocator Control

ATTENTION! :	**Read these Operating Instructions through very carefully before putting the reciprocator control unit, and the reciprocator into operation!**

Front view

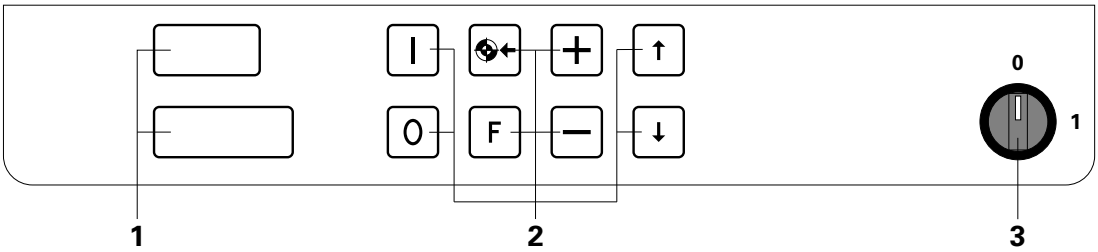

1. Display fields
2. Input keys
3. Main switch (OFF)

Figure 1.

1.1 Special characteristics

The OptiMove 2 Reciprocator Control was designed to use the latest technology and to be programmed by the user.

The new OptiMove 2 operating software simplifies programming, increases the overview and is user-friendly.

- Simple and clearly arranged programming through user-friendly programming levels
- 64 different programs (Procedure positions)
- Manual control through the keypad or externally with a digital control signal
- All axis movements are freely programmable
- Simple adjustment through the system parameters
- Fine positioning - 1mm
- Hardware available as Housing or Rack version
- Input voltages - 100, 110, 120, 200, 220, 230, and 240 V

ATTENTION! :	**The key of the input field should only be operated with the finger tips and under no circumstances with finger nails or hard objects!**

Issued 06/00

1.2 Axis control system with OptiMove 2

The complete axis control system consists of the OptiMove Powder Reciprocator Control, the frequency converter, and a reciprocator with AC motor.
The frequency converter receives the supply voltage, and control signal directly from the OptiMove Powder Reciprocator Control unit.

The OptiMove Powder Reciprocator Control is responsible for the exact positioning adjustment of the carriage by evaluating the signal from the reciprocator incremental pulse generator in the reciprocator.

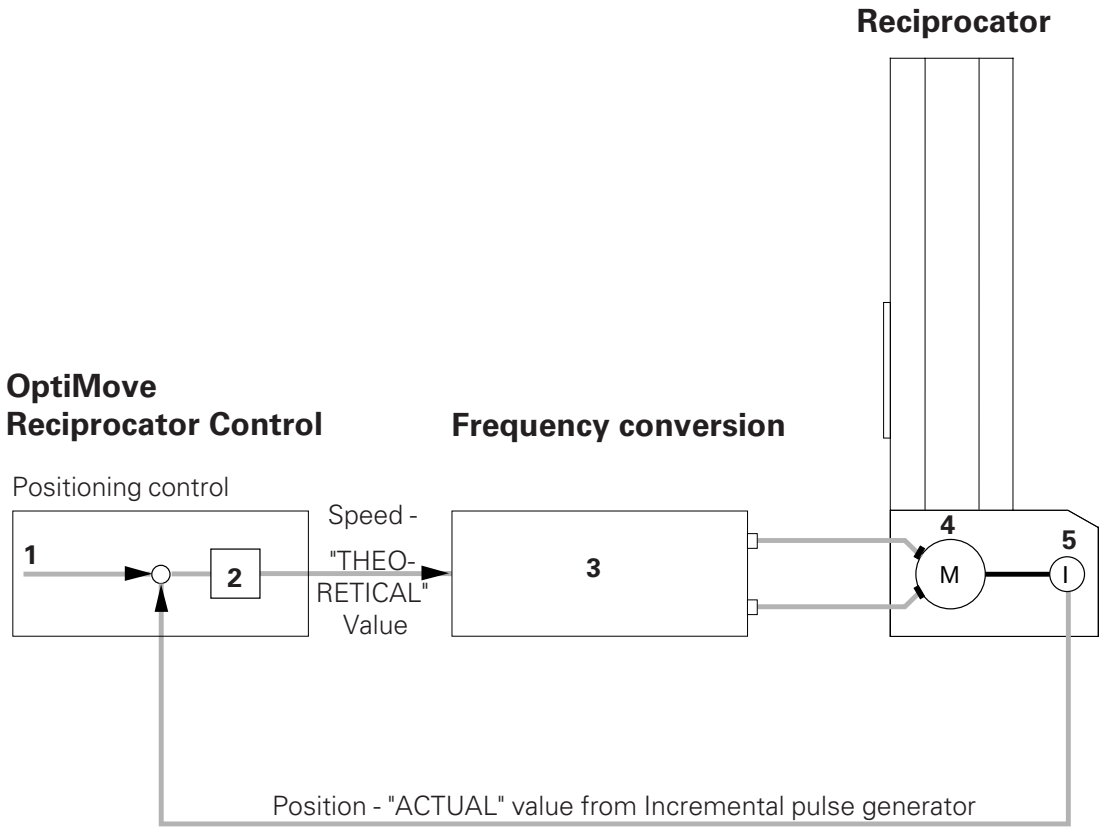

1 Position - "THEORETICAL" value
2 Adjustment control
3 Frequency converter
4 AC motor
5 Incremental pulse generator

Figure 2.

2. Start-up

2.1 Cable connections on the axis control system and OptiMove 2

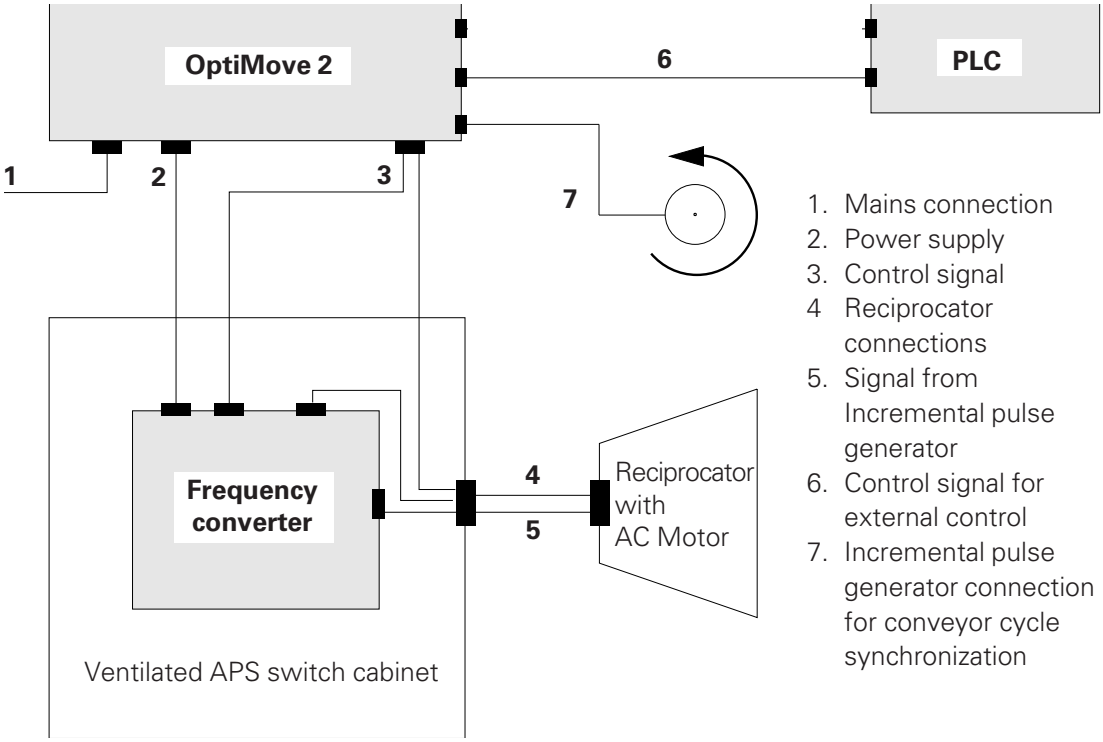

Figure 3.

Connections on the rear of the OptiMove 2

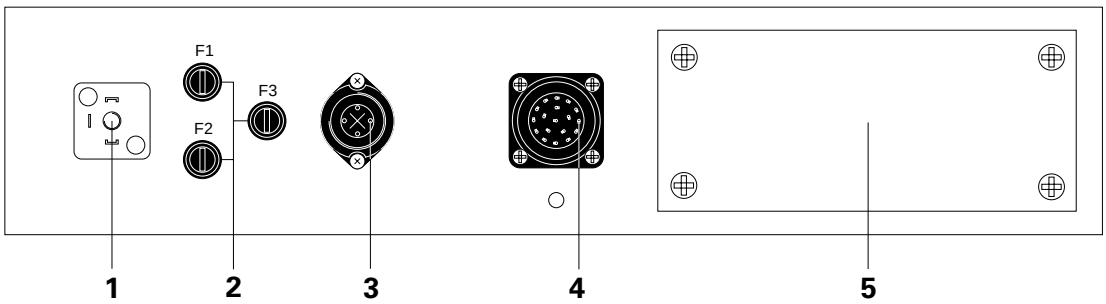

1 Mains connection
2 Fuse holders - F1, F2, and F3
3 Connection for power supply - 4 pole socket
4 Control signal - 18 pole socket
5 Cover plate for cable lead-throughs

Figure 4.

The cable connections have different plugs and cannot be wrongly connected on assembly.

ATTENTION! :	**Before disconnecting the cables from the sockets always switch the equipment OFF at the Mains and disconnect the Mains cable!**

Issued 06/00

2.2 Hardware versions of the OptiMove 2

The OptiMove 2 Powder Reciprocator Control is available as a Housing version for building into an APS 1 or APS 2 Automatic Powder System, and also as a Rack version for building into a switch cabinet.

2.2.1 OptiMove 2 - Housing version :

Front view:

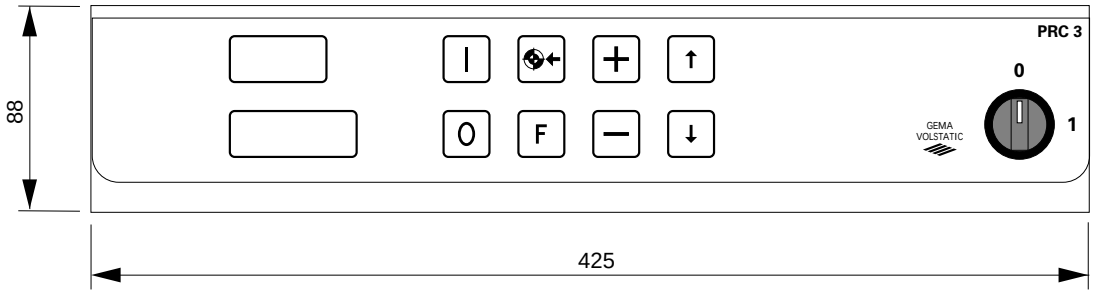

Rear view :

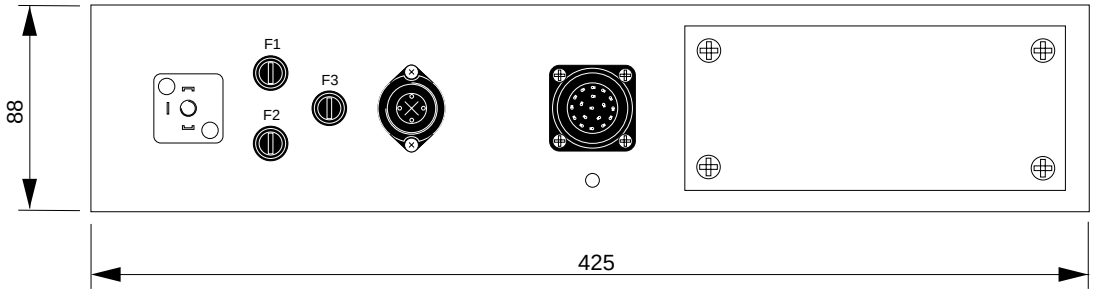

View from above :

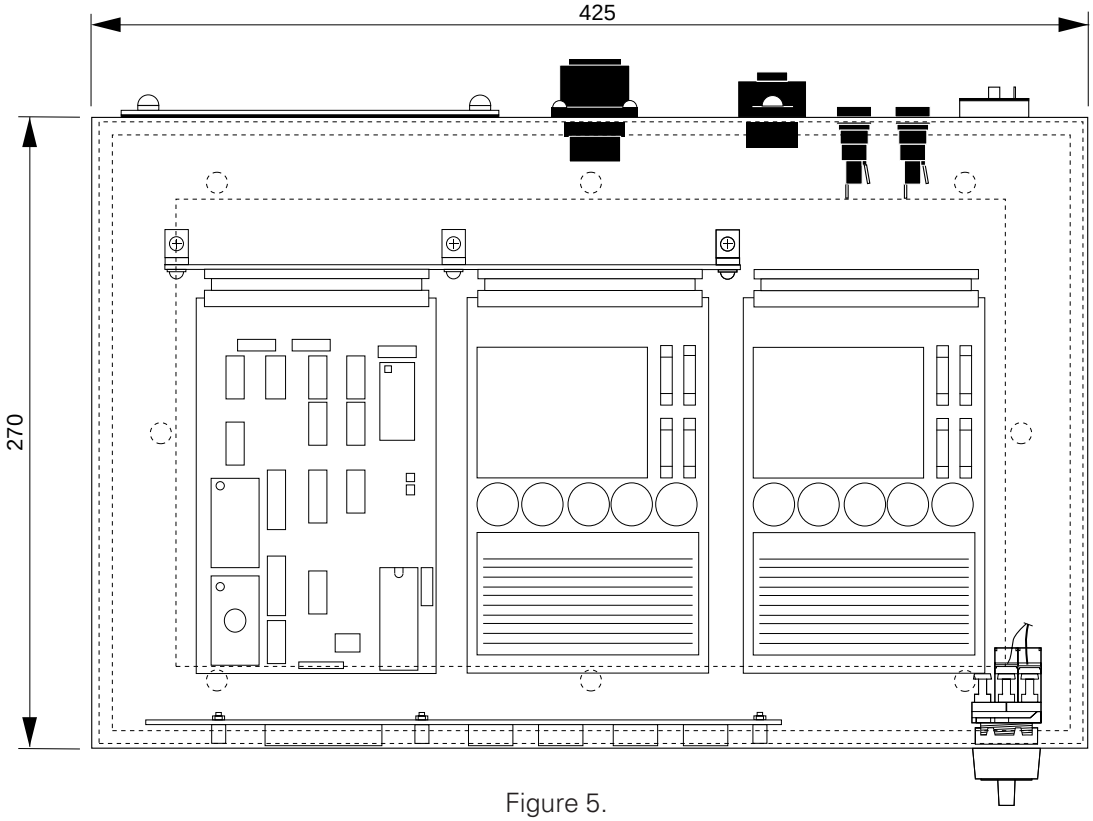

Figure 5.

2.2.2 OptiMove 2 - Rack version

The Rack version is based on a 19 inch Rack and is suitable for building into a switch cabinet for customer specific applications.

Front view :

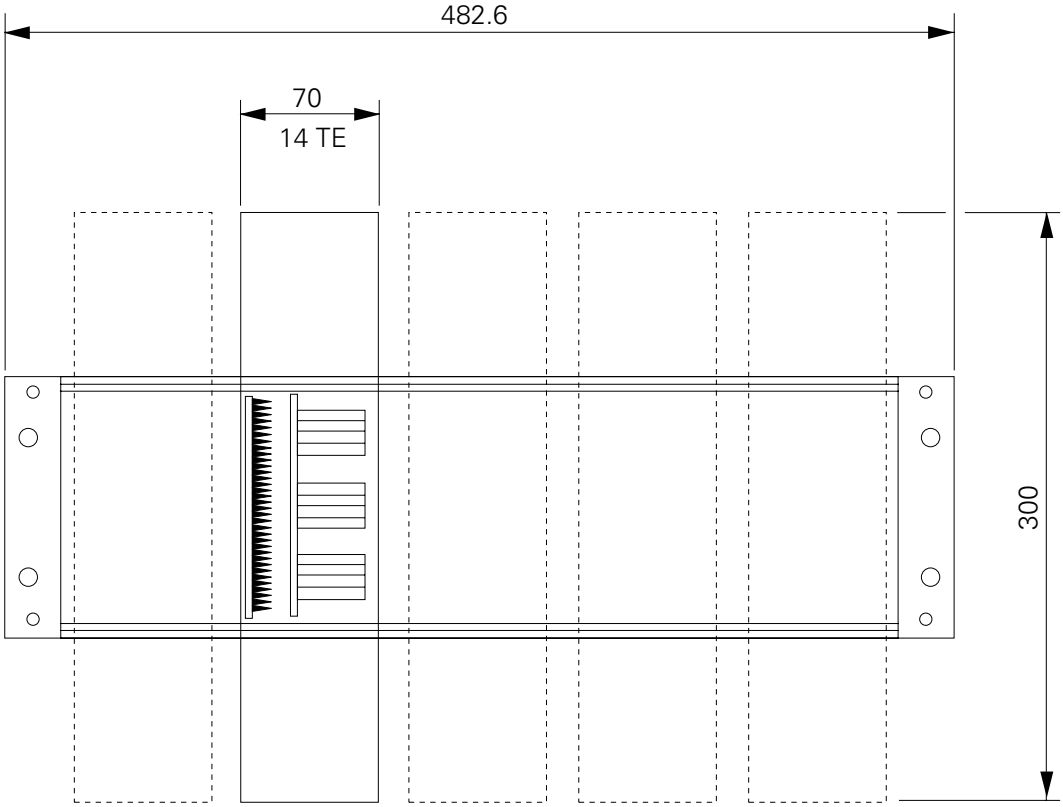

Figure 6.

A maximum of 5 OptiMove 2 Control units (Printed Circuit Boards) can be built into a 19 inch Rack.
The display, with keypad, is built into the front of the switch cabinet and connected with the plug - X9. A mounting frame is available for the Front display. The Front display, with a keypad, is identical with the Housing version.

2.2.3 Front display with mounting frame (Rack version)

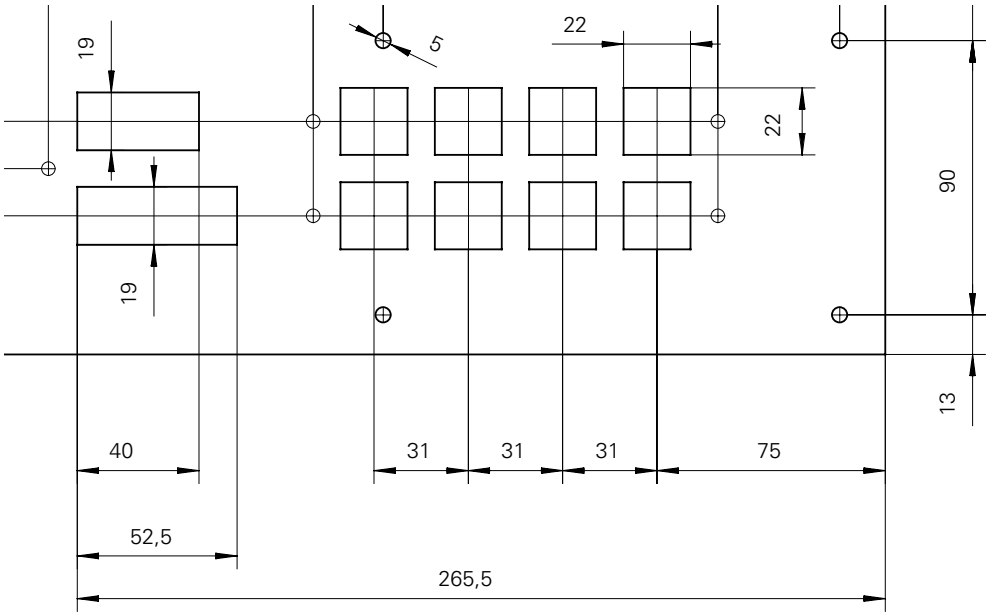

Cut-out in the front panel : 80 x 306 mm
Dimensions of the mounting frame : 116 x 330 mm

Figure 7

2.3 Selection of the Mains input voltage

Before the OptiMove 2 Powder Reciprocator Control is connected to the Mains, the built-in Mains section **must** be adapted to the available **Mains voltage**.

ATTENTION!!	**A voltage 10% or more over or under the nominal value can lead to malfunctioning or damage to the control electronics.**

Input voltage range : 100 V, 110 V, 120 V, 200 V, 220 V, 230 V, and 240 V

In order to set the Input voltage of the OptiMove 2, proceed as follows :

1. Disconnect all the electrical connections on the rear of the control unit and pull out the control unit.
2. Unscrew the quick-release screws on the cover of the control unit a half turn and remove the cover.
3. The connections and bridges on the 10 pole plug - X1 on the Back plane must now be wired to correspond with the selected voltage.

(See Chapter 5.3 - Mains supply - POWER IN)

2.4 Setting the bridges on the control board (PCB) : AC operation only.

The bridges on the control printed circuit board - Micro 3 are set at the factory.
If the control printed circuit board - Micro 3 is replaced, the bridges must be checked and if necessary reconnected.

ATTENTION!	**Incorrectly set bridges on the control printed circuit board - Micro 3 can lead to malfunctioning and/or damage to the equipment.**

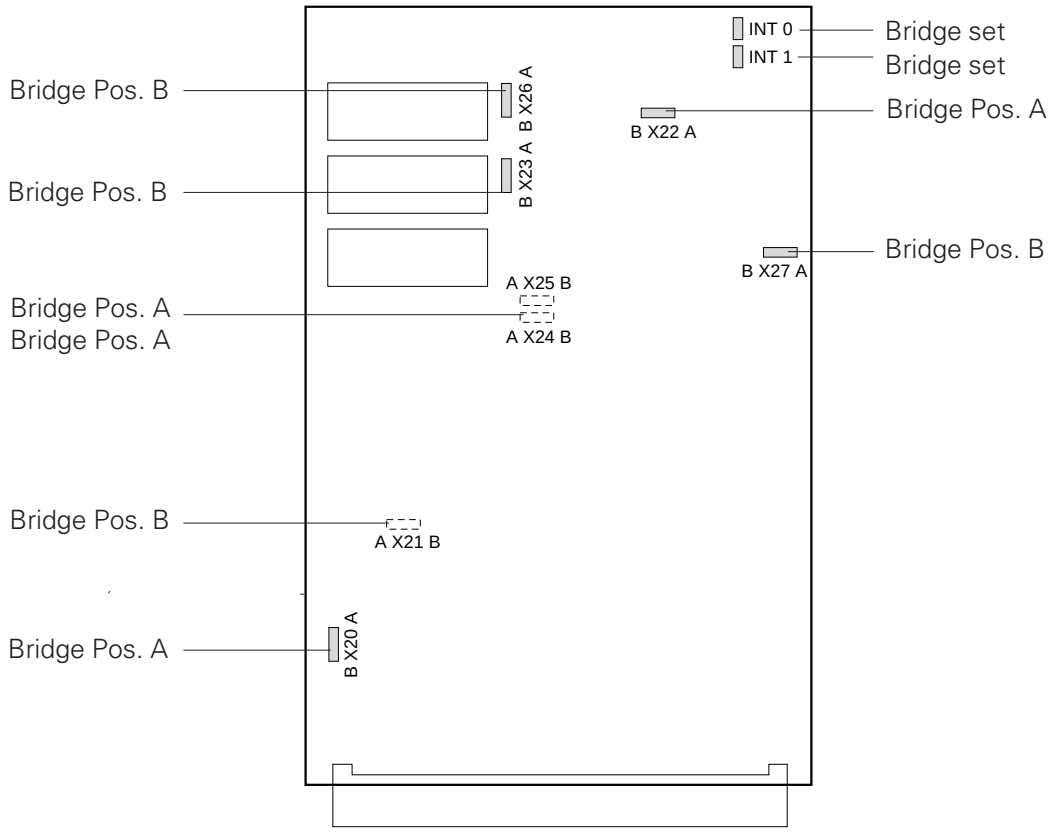

(see also Appendix D : MICRO 3 Control board configuration possibilities)

Figure 8.

2.5 Display and keypad fields

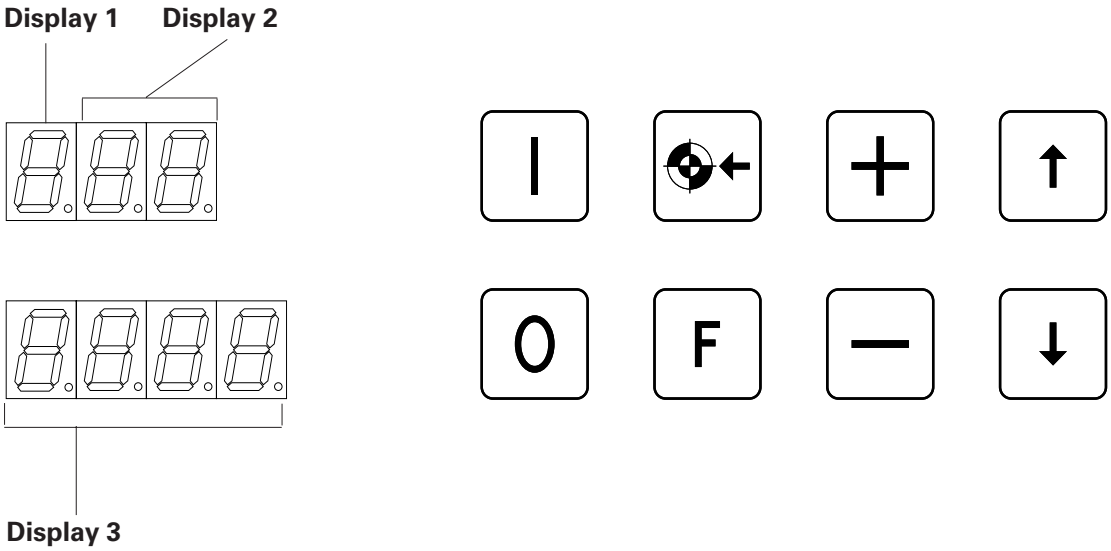

Figure 9.

Display field 1	Symbol for the actual function symbol
Display field 2	Shows the actual program number or system parameter number.
Display field 3	Position display or display of the input value

2.6 Symbols on the display


Symbol for Program (active)

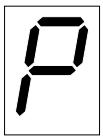
Symbol for Program (inactive)

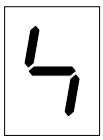
Symbol for system parameter - EDIT

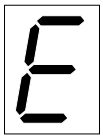
Symbol for error messages


Symbol for position

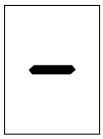
Symbol for the speed

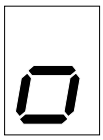
Symbol for dwell time

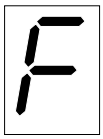
Symbol for switching point 1 function output - Set/Reset


Symbol for switching point 2 function output - Set/Reset

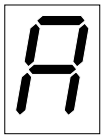
Next program address (next procedure step)

Figure 10.

2.7 Keypad symbols

I	Start	Axis "ON"
O	Stop	Axis "STOP"
	Reference point	Start - Travel to Reference point
F	Help Key Error acknowledgement	acknowledges all errors except E10
+	Increase value	
—	Decrease value	
↑	Select input parameter, program step selection - up	
↓	Select input parameter, program step selection - down	

ATTENTION! : The keypad should be operated with the fingers tips and under no circumstances with fingernails or hard objects!

Figure 11.

2.8 Keypad combinations

For key combinations the key [F] must be pressed first, then press the second key [ ].

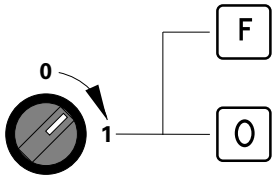

[F]	RAM Reset (see exact description)
[0]	Software version (see exact description)

[F] [I]	Set-up mode - "ON"
[F] [0]	Set-up mode - "OFF"
[F] [+]	Parameter - "EDIT" - ON
[F] [–]	Parameter - "EDIT" - OFF
[F] [↑]	System parameter - "EDIT" - ON
[F] [↓]	System parameter - "EDIT" - OFF

Figure 12.

2.9 RAM Reset

1. Turn the Main switch of the OptiMove 2 - OFF
2. Press Function key [F] while turning the Main switch - ON.
3. The error message E11 appears on the display.
4. With the RAM Reset all data is written over with default values. Input values and stroke limits must be reset.

   In order to set the stroke limits the keys [F] [↑] must be pressed simultaneously

See 2. 11 "Setting the system parameters", page 14.

2.10 Checking the software version

1. Turn the Main switch of the OptiMove 2 "OFF"
2. Press the key [0] while turning the Main switch "ON".
3. The following appears on the display :

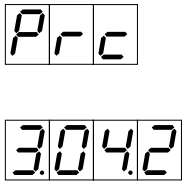

2.11 Setting the system parameters

The OptiMove 2 is adapted to the type of reciprocator, and plant specific characteristics with the system parameters.

System parameter settings for the reciprocator

Display	Definitions	SPV	Default
501 SP1	Upper stroke limit (m)	0.1000-9.999	0.400
502 SP2	Reference point position (m)	0.050-0.500	0.050
503 SP3	Increm. pulse gen. adjustment (Pulses/dm)	1-9999	1462
504 SP4	Maximum speed (m/s)	0.050-0.600	0.600
505 SP5	Minimum speed (m/s)	0.050-SP4	0.050
506 SP6	Acceleration (m/s^2)	0.700 - 2.500	1.500
507 SP7	Circuit amplification (Factor)	400 - 800	600
508 SP8	Alarm Input - OFF	0	0
	- ON	1	

System parameter adjustment for synchronization (Conveyor cycle generation)

Display	Definitions	SPV	Default
509 SP 9	Increm. pulse gen. adjustment (Pulses/dm)	1 - 9999	583
510 SP10	Conveyor cycle for PLC (mm)	5 - 50	10

The system parameters are set to default values at the factory. On a RAM Reset the system parameters are loaded with default values.

For reciprocators with an X and/or Y Axis

Drives with a gearbox ratio of 20:1, and a compound gear ratio of 2:1on the X-, respectively, the Y- Axis carriage the system parameter SP3 must be set to 1975 pulses/dm.
The maximum procedure speed for this setting must be limited to 0.1 m/s (SP4).

ATTENTION!	**Incorrect input of system parameters can lead to damage to the axes and/ or the booth.**

Issued 06/00

2.11.1 System parameter 1 : Setting the upper stroke limit

When the OptiMove 2 Reciprocator Control drives a Gema-Volstatic ACR Reciprocator, all the system parameters are already set to the values for this axis.
The only system parameter which must be set is the upper stroke limit.
The maximum stroke height (max. Travel) is limited by the upper stroke limit.
The maximum stroke height is limited by the corresponding height of the reciprocator or by the maximum height the gun slots in the booth.
The upper stroke limit of the OptiMove 2 Powder Reciprocator Control is always set at 0.400 m at the factory.

ATTENTION!	**The maximum upper stroke limit should only be set to the height of the corresponding reciprocator. If an incorrect stroke limit (too high) is set, this can lead to damage to the reciprocator and/or the booth!**

In order to set the upper stroke limit (System parameter 1), proceed as follows :

1. Position the reciprocator at the booth and connect the OptiMove 2 Powder Reciprocator Control (see Cable connections - page 3).

2. Switch on the OptiMove 2 Powder Reciprocator Control with the Main switch.
   The following appears on the display : [ ][ ][ ]

   Prc3

3. Press any key.
   The following appears on the display : E10

   [ ][ ][ ][ ]

4. Press keys [F] and [↑] simultaneously for approximately 3 seconds.
   The OptiMove 2 Powder Reciprocator Control switches to the level "System parameter - EDIT".

   The following appears on the display : 401

   0.400

   (Default value)
5. The upper stroke limit can be set with the keys [+] and [−].

6. If the other system parameters must be edited, these can be selected with the key [↑] or [↓].

7. Press the two keys, [F] and [↑] simultaneously.
   The OptiMove 2 Powder Reciprocator Control exits from the system parameter "Upper stroke limit".
   The following appears on the display:

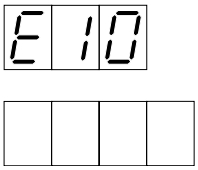

The "Travel to Reference point" [⊕] must restarted.

If the system parameters must be changed, fill in the actual values in the corresponding table in Appendix B.

ATTENTION!	**Incorrect inputs can lead to damage to the reciprocator and/or the booth!**

2.11.2 System parameter 2 : Reference point

The Reference point of the reciprocators is **always** 50 mm **above** the Zero point.
The Reference point should be adjusted to the lowest position of the gun slots of the booth, and the lowest reversing point of the reciprocator stroke (according to the application). When displacing the proximity switch, the Zero point is also displaced.
For most applications it is not necessary to displace the Proximity switch.
If the Zero point must be displaced, this should only be in the upward **direction.**
The travel position can be freely selected between the upper stroke limit, and the Zero point.

ATTENTION !	The displacement of the proximity switch upwards shortens the stroke. **This change must be taken into account when setting the upper stroke limit without exception!**

ATTENTION!	**Displacing the proximity switch can lead to damage to the reciprocator and/ or the booth! Before any displacement of the proximity switch is undertaken, please contact a Gema service centre!**

Reference point and Zero point

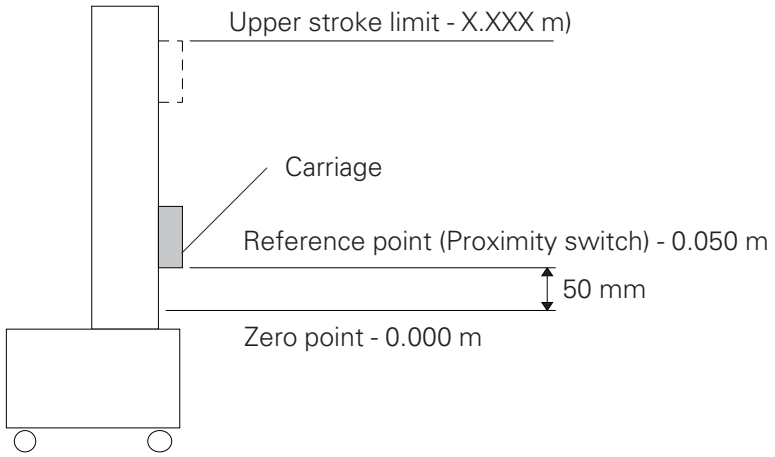

The "Travel to Reference point" command is given with the key .

Figure 13.

3. Programming the OptiMove 2

The operating software of the OptiMove 2 is set out for the user in 5 programming levels.

These are :

- STOP
- START
- EDIT
- SET UP
- SYSTEM PARAMETER

Each of these program levels has exactly defined functions.
The individual program levels can be selected with a single key or a key combination.

The structure in the form of a syntax diagram is graphically illustrated on the following pages. A careful study of this diagram will greatly help in understanding the programming steps.

Syntax diagram of the programming levels

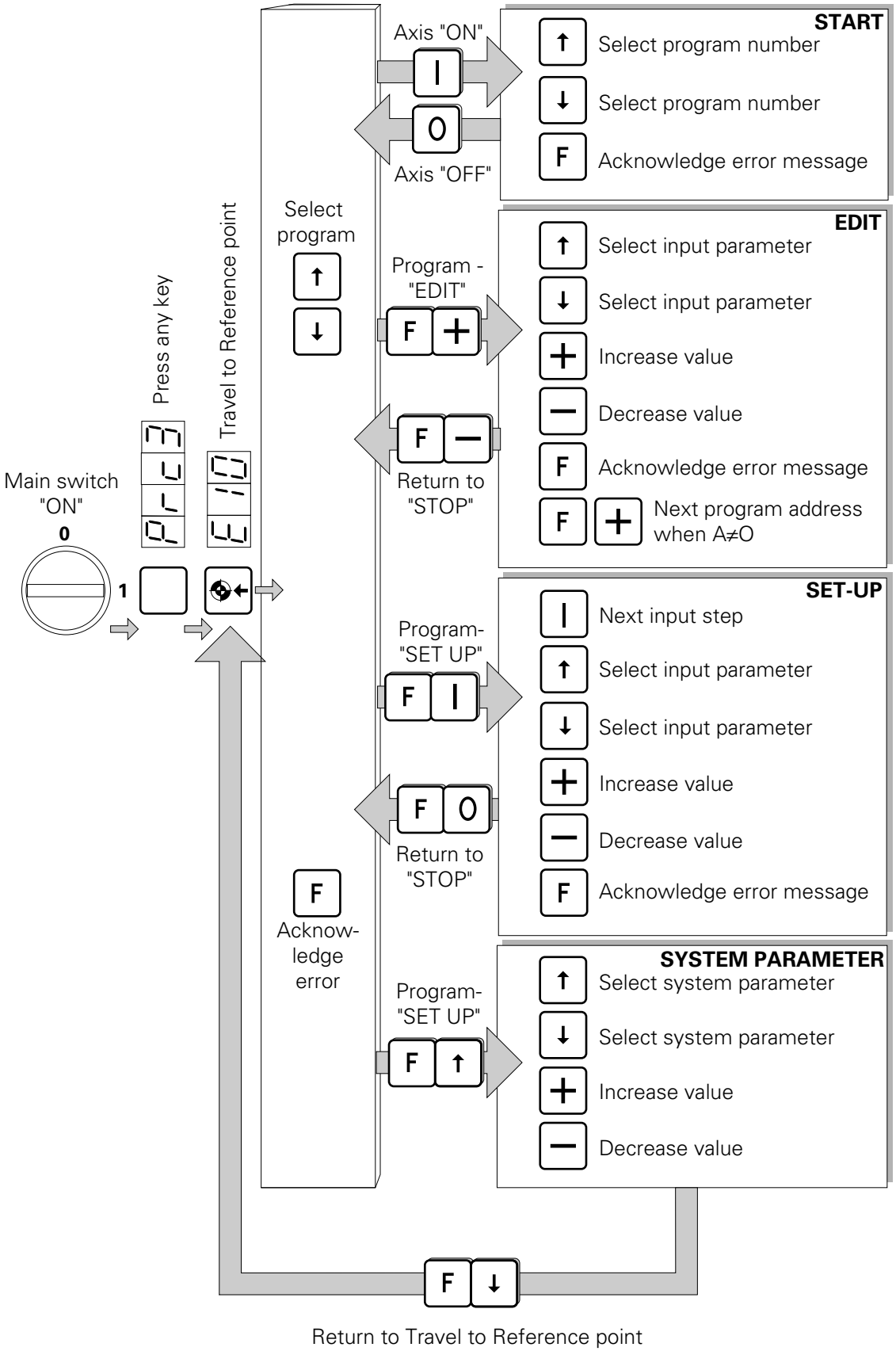

Figure 14.

3.1 Programming levels

3.1.1 START

After switching on the Main switch "PRC3" appears on the display. When any key is pressed the message "E10" appears on the display, and the "Travel to Reference point" command can be given.
Afterwards the "Travel to Reference point" is automatically switched to the level "STOP". The desired program can now be selected. The levels "START, EDIT, SET UP or SYSTEM PARAMETER" can be entered from the level "STOP".

START
Pressing the key [I] switches to the level "START" and the selected procedure is activated. In the level "START" the program number can be selected when the reciprocator is running. The reciprocator can be stopped again by pressing the key [0]. The program switches automatically to the level "STOP".

3.1.2 EDIT

Pressing the key combination [F][+] switches from the level "STOP" to the level EDIT.
In this program level the following functions are available :

- Select the procedure parameter with the keys [↑] and [↓].
- Parameter values are increased with the key [+] and decreased with the key [−].
- The maximum value of the preselected input parameters can be set with the key [I].
- The minimum value of the preselected input parameters can be set with the key [0].
- Error messages are acknowledged with the key [F].
- Switching to the next step in a program step chain (when A • O) is done with the key combination [F][+]. If there is no following step (A = O) then "END“ appears on the display.

To enter the program level "STOP" the key combination [F][−] must be pressed.

3.1.3 SET UP

In this program level the procedure positions can be approached step by step and edited. The procedure positions can be directly taken from the object to be coated in a Teach-In procedure.

Changing from the level "STOP" to the level SET UP is done by using the key combination [F][I]. The axis travels directly to the first, actual displayed position.

The following functions are available :

- Start the next procedure step with [I].
  If there is no further step (A • O) "END" appears on the display.
- Select the procedure parameter with the keys [I] and [↓].
- The parameter values are increased with the key [+] and decreased with the key [−]. The axis carries out the corrections simultaneously as they were input.
- Acknowledge error messages with the key [F].

In order to enter the program level "STOP" again press the key combination [F][0].

Issued 06/00

3.1.4 SYSTEM PARAMETER

Switching to the level "EDIT" to edit the system parameter is done with the key combination [F] [↑]. The desired system parameter can be selected with the keys [↑] and [↓] and are increased with the key [+] or decreased with the key [−].

To exit from the level "SYSTEM PARAMETER" the key combination [F] [↓] is used.

In order to enter the level "STOP", the Reference point must be approached again by pressing the key [⊕←].

3.2 Structure of a program step (Procedure step)

A program step consists of the following Parameters :

Display	Designation	Input range
U	Procedure position	0.00 -9.999 m
–	Speed	0.005-0.600 m/s
o	Dwell time (in the procedure position)	00.0-60.0 sec
F	Switching point 1 function output (loop counter, gun control)	Set Set 1.000 - 1.999 Switching 0.000 - 0.999 positions Reset
7	Switching point 2 function output (loop counter, gun control)	Set Set 1.000 - 1.999 Switching 0.000 - 0.999 positions Reset
A	Program addresses (for following step)	1-64: Program addresses 0 : No further program step

A user program can consist of a single program step when only one position is to be approached.

A program sequence is created by joining a number of program steps.
The program steps are then processed in a certain order.

See "3.3 Programming the OptiMove 2", page 25.

Issued 06/00

3.2.1 Program parameters on the display

Display : U01 — Symbol for Position and Program step number

2.000 — Desired Position

Display : -01 — Symbol for Speed and Program step number

0.200 — Desired Speed

Display : o01 — Symbol for Dwell time and Program step number

00.0 — Desired Dwell time in seconds

Display : F01 — Symbol for Switching point 1 function output and Program step number

1.100 — Switch condition of the Function outputs 0/1
Switching position of the function output

Display : 701 — Symbol for Switching point 2 function output and Program step number

0.100 — Switch condition of the Function outputs 0/l
Switching position of the function output

Display : A01 — Symbol for Program addresses and Program number

0002 — Desired Program step address

Issued 06/00

3.3 Programming examples :

3.3.1 Positioning example

Display:		Input value:
U	=	1.000 m
-	=	0.100 m/s
0	=	00.0 sec
F	=	0.000
7	=	0.000
A	=	0.000 Address

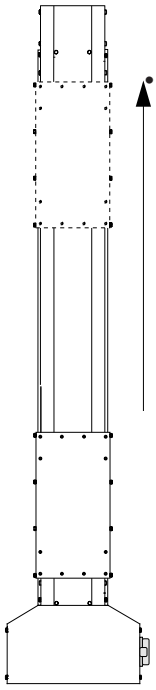

Stop at position = 1,000 m

Procedure speed V = 0.100 m/s

Start in Output position

Figure 15.

3.3.2 Example for oscillating movements

Program 1		Program 2	
Display	Input value	Display	Input value
U	= 0.010 m	U	= 2.000 m
–	= 0.200 m/s	–	= 0.100 m/s
o	= 00.0 sec	o	= 00.0 sec
F	= 0.000	F	= 0.000
7	= 0.000	7	= 0.000
A	= 0002 Address (Following address Program step 2)	A	= 0001 Address (Following address Program step 1)

Approaching the reversing position

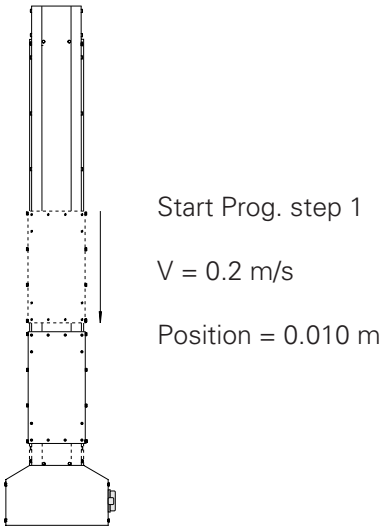

Program 1 / Program 2

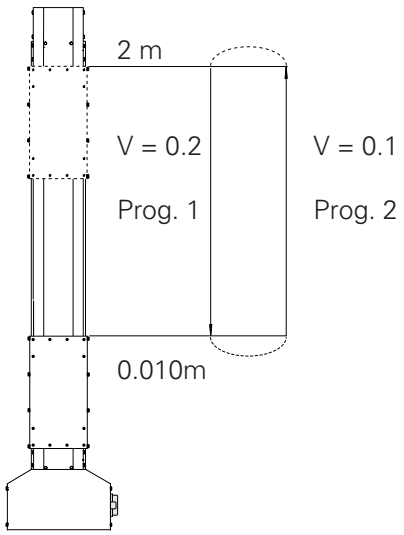

Figure 16.

3.3.3 Travel/Time diagram - Example :

	P1	P2	P3	P4	P5
U	1.000	2.500	1.500	3.500	1.000
-	0.250	0.500	0.200	0.400	0.500
o	0.0	3.0	2.0	0.0	0.0
F	0.000	1.000	1.000	1.000	0.000
7	0.000	1.000	1.000	1.000	0.000
A	0002	0003	0004	0005	0002

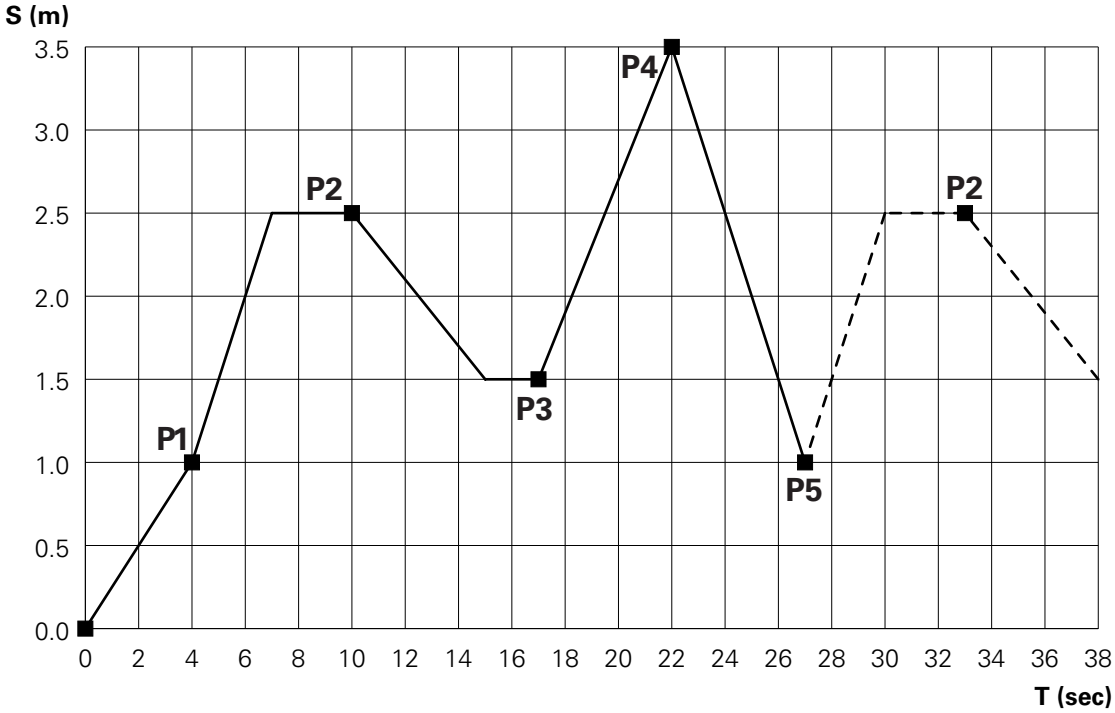

Function output (**F**) (Loop counter, Gun control)

Program P1 : Start position program sequence
Program P2 - P5 : Program sequence

Figure 17.

3.3.4 Using the function output

The function output can be set and reset in a program (procedure step) with two switching points. The switching position of the first switching point can be selected between 0 and 999 mm, after entering the respective program. The switching position of the second switching point can be selected between 0 and 999 mm, before the end of the respective program.

Example :

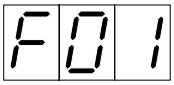

Switching point of program 1

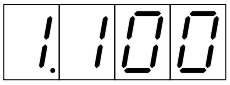

In program 1 the function output is set to 1 (High) after 100 mm

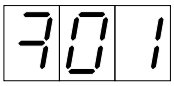

Switching point 2 of program 1

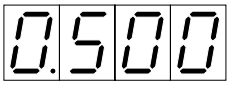

500 mm before program 1 is finished the function output is set to 0 (Low)

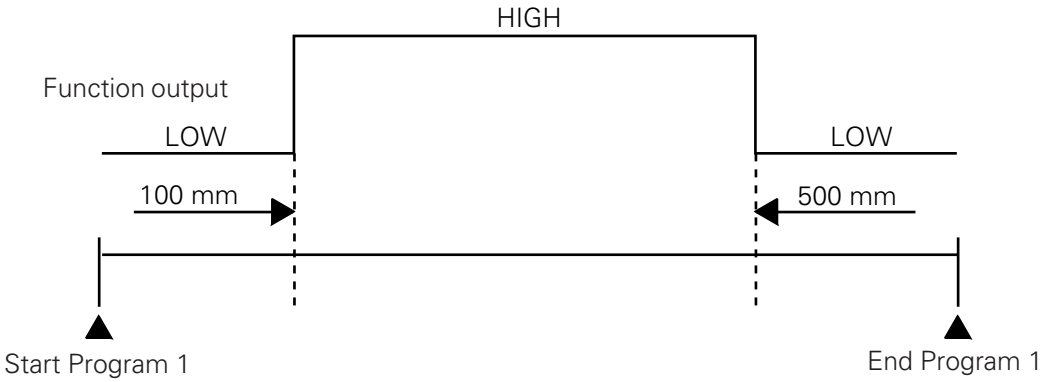

Figure 18

3.4 Program switching

Program switching can be carried out through the keypad (manually) or through an external control signal.

If a program switch takes place when the axis is moving, the axis does not stop, but immediately carries out the new program step.
When changing speed the acceleration development (Ramp) is taken into account.

If a program change is initiated during an acceleration or braking phase, then the acceleration/deceleration ramp development of the old program step is completed before the ramp of the following program is carried out. The display of the actual program number is immediately updated.

3.5 Continuous

So that a program sequence, consisting of a number of program steps, can be started in a continuous sequence a minimum distance must be maintained between the procedure positions dependent on the procedure speed.

If two procedure positions are too close together, the maximum procedure speed cannot be reached.

The continuous movement sequence will therefore be terminated and **N.CO.** (No Continuous) appears on the display.

To calculate the minimum distance - D**S** between two consecutive procedure positions **S1,** and **S2,** the following is formula valid :

$$\mathbf{DS = S2 - S1 \quad {}^{3} \frac{V22}{a}}$$

Example : Acceleration $a = 1.5\ m/s^2$ (System parameter - SP 6)

Program step P1 : V1 = 0.2 m/s
S1 = 1.000 m

Program step P2 : V2 = 0.4 m/s
S2 = 1.008 m

$$DS = S2 - S1 = 1.008\ m - 1.000 = 0.008\ m$$

$$\frac{V2^2}{a} = \frac{(0.4\ m/s)^2}{1.5\ m/s^2} = \frac{0.16\ m^2/s^2}{1.5\ m/s^2} = 0.107\ m$$

$$DS < \frac{V2^2}{a}$$ ⇒ **Continuous is not possible.**

Continuous is possible for S2 > 0.107 m

Issued 06/00

Continuous is possible

$$DS = S2 - S1 \geq \frac{V22}{a}$$

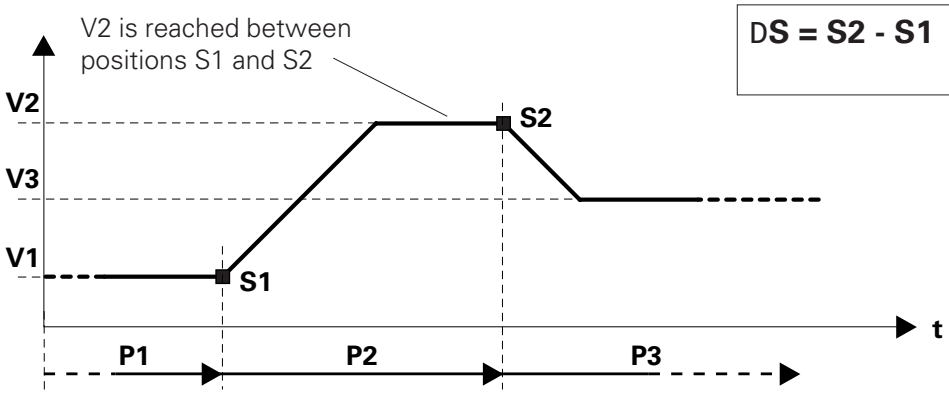

Continuous is not possible

$$DS = S2 - S1 < \frac{V22}{a}$$

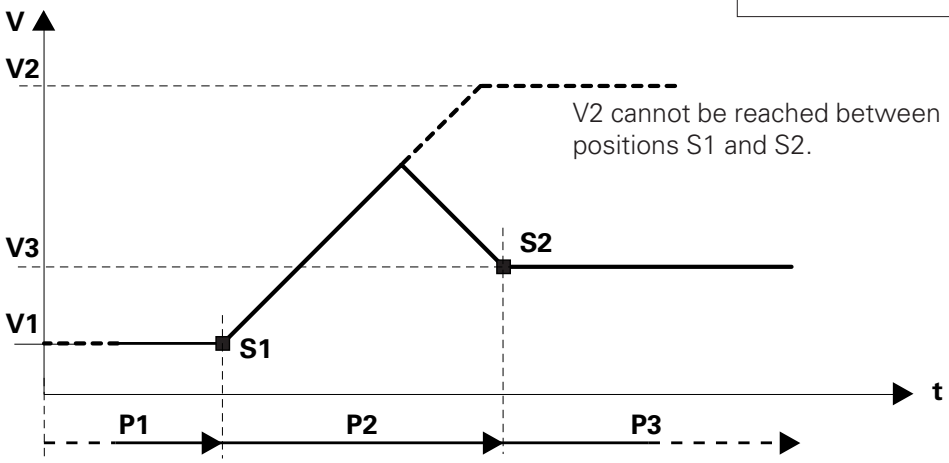

V2 **cannot** be reached between the positions S1 and S2.
The movement sequence cannot be carried out continuously.

During P2 **n.CO** (no Continuous) appears on the display.

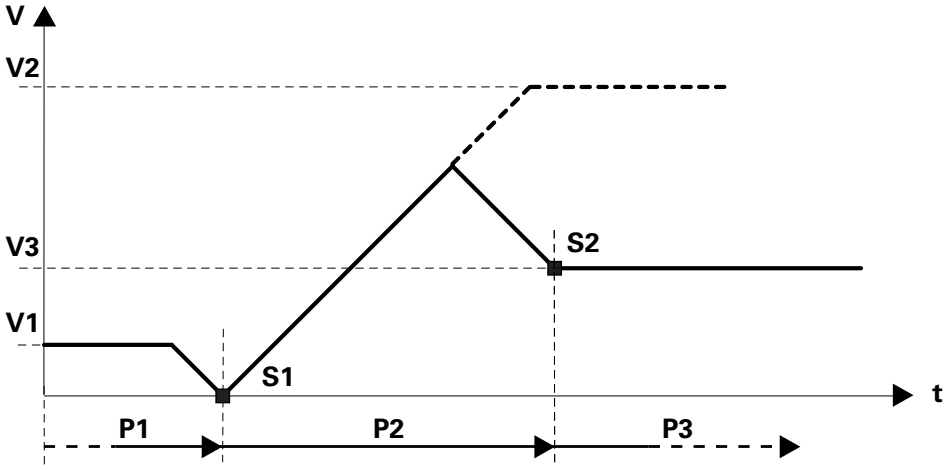

Figure 19

4. Automatic operation through an external control

4.1 Function

The function the OptiMove 2 can be activated by digital control signals from an external control unit.

Switching from manual operation, with the keypad, to automatic control through the digital inputs and outputs by occupying one of these inputs. After successful switching input through the keypad is locked.

The keypad is deactivated,with the exception of error acknowledgement through key F.

4.2 Switching from Manual to Automatic

Switching between manual, and automatic operation is initiated with the control signal - MAN/AUTO.

MAN/AUTO : High Æ Automatic

MAN/AUTO : Low Æ Manual

4.3 Travel to Reference point with an external control

The Travel to Reference point command of the not yet referenced axis is released by the digital input - START REF on logical - High.

If the axis is already referenced can be determined with the digital output - ERROR REF.

ERROR REF : High Æ Axis is referenced

ERROR REF : Low Æ Axis is not yet referenced

4.4 Program selection with an external control

For the selection of a program number, 6 digital inputs (2^0, 2^1, 2^2, 2^3, 2^4, 2^5) are available.

All program numbers are binary coded (64 possibilities).

The code set out below corresponds to the desired program numbers.

Relationship of the Binary code and Program numbers

2^5	2^4	2^3	2^2	2^1	2^0	Prog. No
0	0	0	0	0	0	64
0	0	0	0	0	1	1
0	0	0	0	1	0	2
0	0	0	0	1	1	3
0	0	0	1	0	0	4
0	0	0	1	0	1	5
0	0	0	1	1	0	6
0	0	0	1	1	1	7
0	0	1	0	0	0	8
=	=	=	=	=	=	=
-	-	-	-	-	-	-
=	=	=	=	=	=	=
1	1	1	1	1	1	63

Issued 06/00

The code (set out on the previous page) for the program number is read-in and activated by the negative flank of the control signal - STROB.
For program switching the following time sequence must be taken into account :

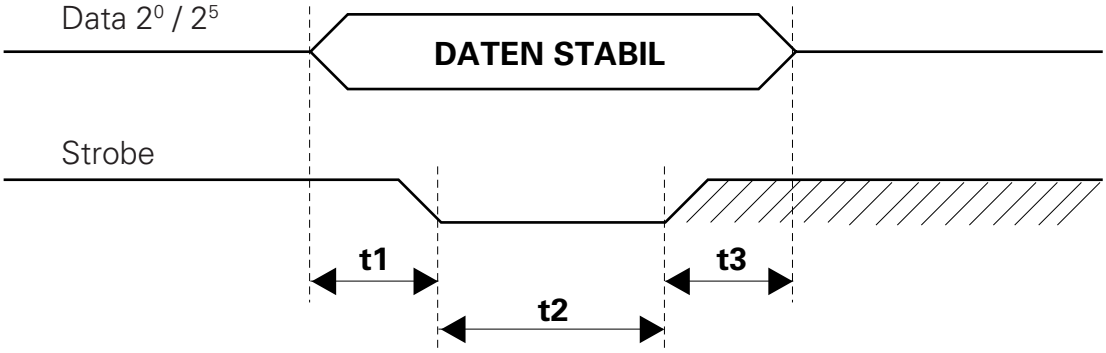

t1	Preparation time :	Minimum 0,5 ms
t2	Signal duration :	Minimum 1,0 ms
t3	Braking time :	Minimum 0 ms

Figure 20

4.5 START, and STOP with an external control

The actual program can be started or stopped by the digital inputs START/ STOP-URP and START/STOP-LRP.

The stop position can be controlled with this combination :

LRP : Lower reversing point
URP : Upper reversing point

START/STOP-URP	START/STOP-LRP	Function
0	0	Axis is stopped
1	1	Axis is started
1	0	Axis is started, and stopped at the upper reversing point
0	1	Axis is started, and stopped at the lower reversing point

STOP URP and STOP LRP are carried out when the actual sequence program forms a closed program loop.

The upper, and lower reversing points are defined as follows :

LRP : Lowest position of the program loop.
URP : Highest position of the program loop.

Issued 06/00

4.6 Alarm Input

The motor is disconnected from the power supply by the OptiMove 2 Control unit through the digital alarm input - EMERGENCY STOP.
This function can be released by the system parameter - SP 8.

EMERGENCY STOP : Low => Axis locked, error message - E09
EMERGENCY STOP : High => Normal operation

Important :	**This input must not be used as an Emergency Stop for personnel protection as this function is operated through the electronics (EN 60 20 4) by the software.**

4.7 Function output

The digital output - FUNCTION OUT can be set or reset with the procedure program.

The switch condition corresponds with the program parameter value - F of the active program step.

Program parameter F = O => FUNCTION OUT = High
Program parameter F = 1 => FUNCTION OUT = Low

4.8 "Program run" signal

If the axis is working through a program can be determined through the digital output - "PROGRAM RUN".

When a program is started the digital output - PROGRAM RUN is active (High). It remains active as long as the actual program has no further following program, and its dwell time has not yet expired.
As soon as the last position is reached, and the dwell time has expired the output - PROGRAM RUN is inactive (Low).

PROGRAM RUN = Low => - Axis is stopped
- Travel to Reference point
- Set-up operation

A program is started which does not have a following program or a dwell time, and the actual axis position is the same as the program position.

PROGRAM RUN = High => - Axis is started
A program is started which does not have a following program, but has a dwell time, and the actual axis position is the same as the program position. When the dwell time has expired, the output - PROGRAM RUN is erased.

Issued 06/00

4.9 Collective error messages

The digital output "GENERAL ERROR" indicates by means of a Low on the output that the axis control is in EDIT, SYSTEM PARAMETER or STOP mode. It also gives the following messages :

E08 : EPROM is wrongly "burnt-in" (Check sum error)

E09: EMERGENCY STOP is released

E11: RAM Reset is carried out

E12: Data loss (Check sum error)

E20: Software end stop overrun

E21: Positioning error too great

E24 : Incremental pulse generator error
Cable broken - signal A or B, or A and B

E25 : Direction of rotation error
Incremental pulse generator signals A and B reversed

GENERAL ERROR : Low Æ An error exists

GENERAL ERROR : High Æ Normal operation

(See also Chapter 7 - Error messages)

Issued 06/00

5. Connections and plug assignment

The OptiMove 2 Powder Reciprocator Control is available in two Hardware versions. The standard version of the OptiMove 2 Powder Reciprocator Control is supplied as a drawer unit.
The second version does not have a housing and can be directly built into a Rack mounting in a switch cabinet.
In both versions the external control signal can be connected to the Back plane (BP 1 for the housing version / BP 2 for the switch cabinet).

5.1 Housing version

Connections on BP 1 (Housing version):

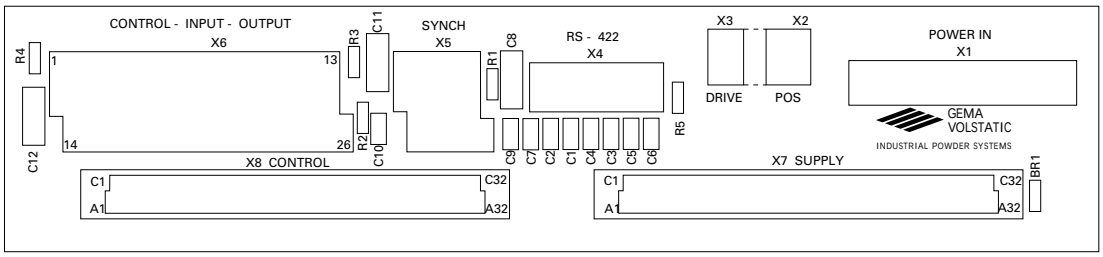

Key to the PCB :

1 **X1** : Power supply (POWER IN)
2 **X2** : Position determination (POS)
3 **X3** : Drive signal (DRIVE)
4 **X4** : RS 422 Serial interface (SINEC-L1)
5 **X5** : Synchronization (SYNCH)
6 **X6** : External control signal (CONTROL - INPUT - OUTPUT)

Figure 21.

5.2 Mounting in a switch cabinet

Connections on BP 2 (for the Switch cabinet)

Control printed circuit board is mounted vertically in the switch cabinet :

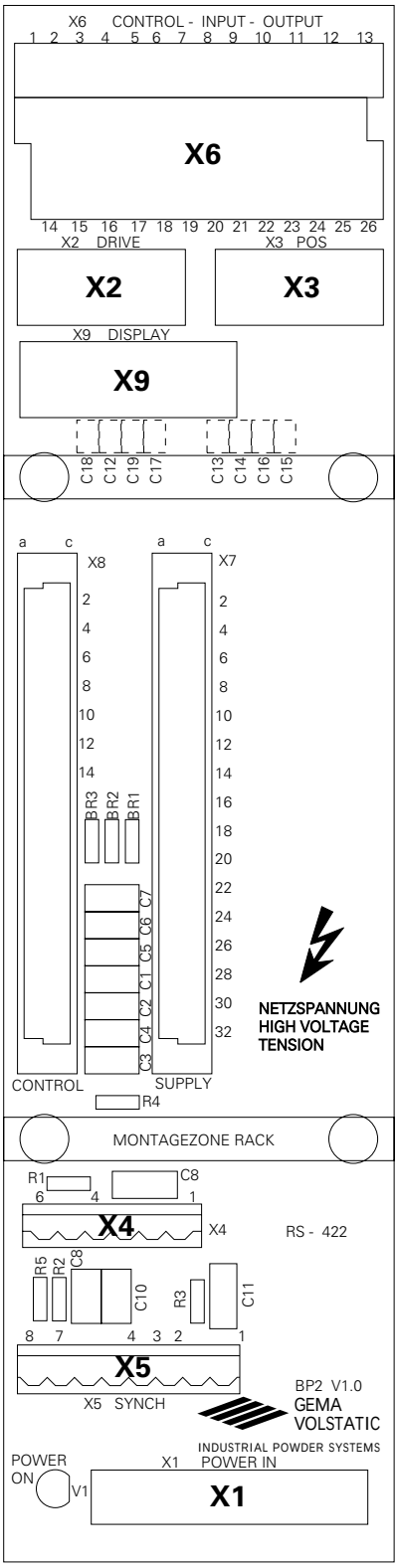

X1 : Power supply (POWER IN)
X2 : Drive signal (DRIVE)
X3 : Position determination (POS)
X4 : RS 422 Serial interface (SINEC-L1)
X5 : Synchronization (SYNCH)
X6 : External control signal (CONTROL-INPUT-OUTPUT)
X9 : Display connections (DISPLAY)

Figure 22.

5.3 Mains supply - POWER IN (BP1/BP2 - X1)

The plug assignment for the power supply is identical for both Hardware versions. The fuse protection for the control section and power supply is already available on the Housing version only.
On the Rack version the fuse protection must be made by the customer analogue to the wiring diagram of the Housing version, with corresponding fuse values from F1 to F3.

X1 POWER IN BACK PLANE - X1				**POWER SUPPLY**			
Mains	**N**	**P**	**Bridge - X1**	**BR1**	**BR2**	**BR3**	**BR4**
100	2	4	3-8 / 5-9	ON	OFF	ON	OFF
110	2	4	3-8 / 5-9	OFF	ON	OFF	ON
120	2	6	7-10 / 3-8	OFF	ON	OFF	ON
200	2	9	4-8	ON	OFF	ON	OFF
220	2	9	4-8	OFF	ON	OFF	ON
230	2	9	6-8	OFF	ON	OFF	ON
240	2	10	6-8	OFF	ON	OFF	ON

Grounded lead connection PE X1.1

Example : for 220 V Mains voltage

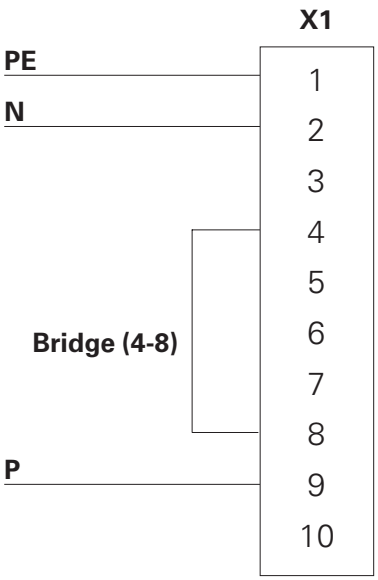

The bridges, BR 1 to BR 4, on the printed circuit board - POWER SUPPLY are set as follows :

BR 1 = OFF
BR 2 = ON
BR 3 = OFF
BR 4 = ON

5.4 External digital control signal (CONTROL-INPUT-OUTPUT)

The plug, and the pin assignment for the digital control unit, and control signal is identical on both Hardware versions :

Housing version :	Back plane - BP 1	Plug X6
Rack version :	Back plane - BP 2	Plug X6

Plug occupation X6 CONTROL-INPUT-OUTPUT

INPUT	
1	Input cable screen
2	GND for input (24 V)
3	Prog. 2^0
4	Prog. 2^1
5	Prog. 2^2
6	Prog. 2^3
7	Prog. 2^4
8	Prog. 2^5
9	Strobe
10	Start Ref.
11	Start / Stop - URP
12	Start / Stop - LRP
13	Sync - ON
24	Emergency Stop
25	Man. / Auto.
26	Reserve
OUTPUT	
14	Output cable screen
15	+24 V for output
16	Conveyor clock
17	Clock sign
18	Function - Out
19	Axis in motion
20	Error summary
21	Error Ref.

5.4.1 Digital inputs and outputs

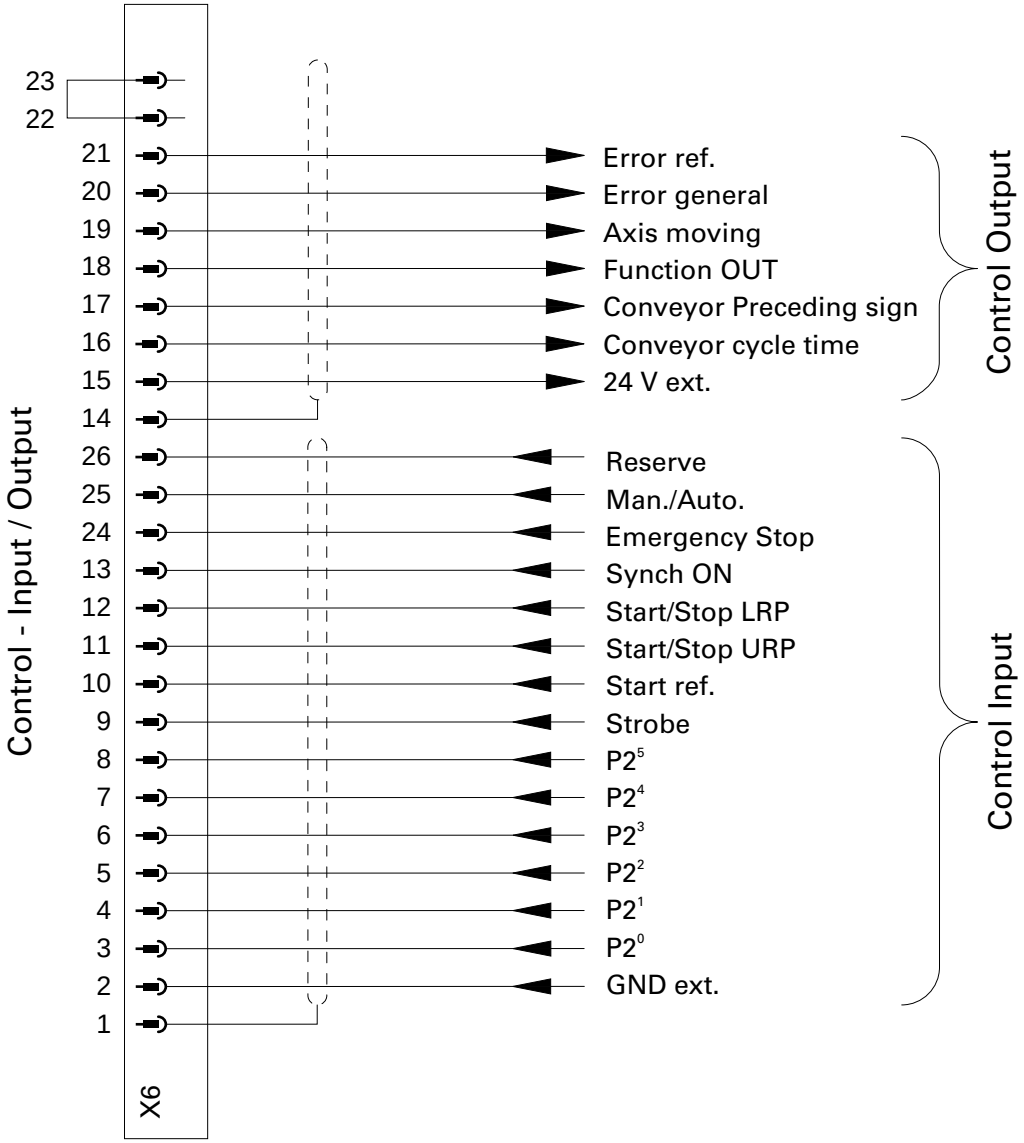

Figure 23.

5.4.2 Electrical connection for a digital output

The digital outputs are set out for operation at 24 VDC and function as galvanically isolated PNP outputs.

Connection example :

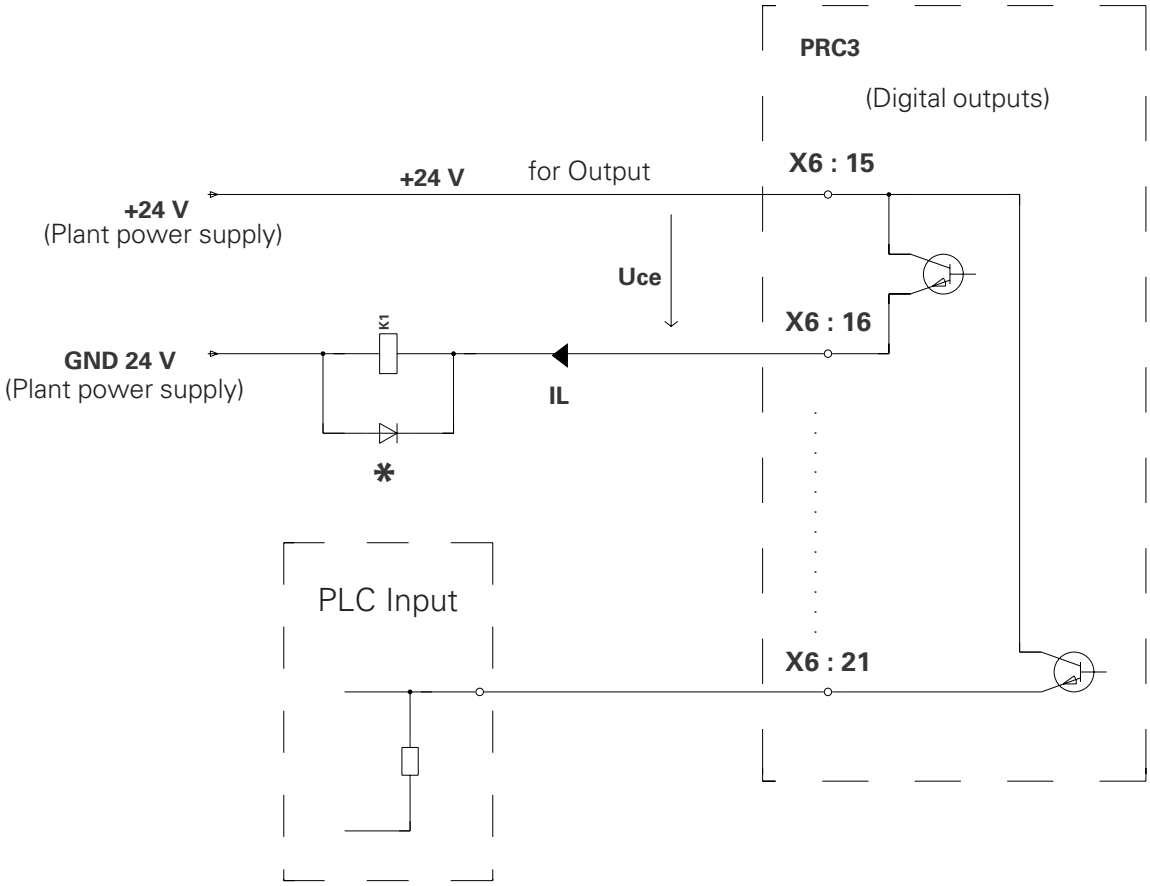

Technical data for the digital outputs :

Maximum Collector-Emitter voltage :	U_{CE} max. = 35 V
	$-U_{CE}$ max. = 6 V
Maximum ballast current :	I_L max. = 30 mA
Maximum residual voltage through the switched output at maximum ballast current :	U_{CEsat} max. = 1.1 V
Maximum residual voltage with inhibited output :	I_{CE0} max. = 500 µA

Important! *Inductive loads must be switched with a recovery diode.

Example : A Type 1N4004 Silicon diode or similar

Figure 24.

5.4.3 Electrical connection for a digital input

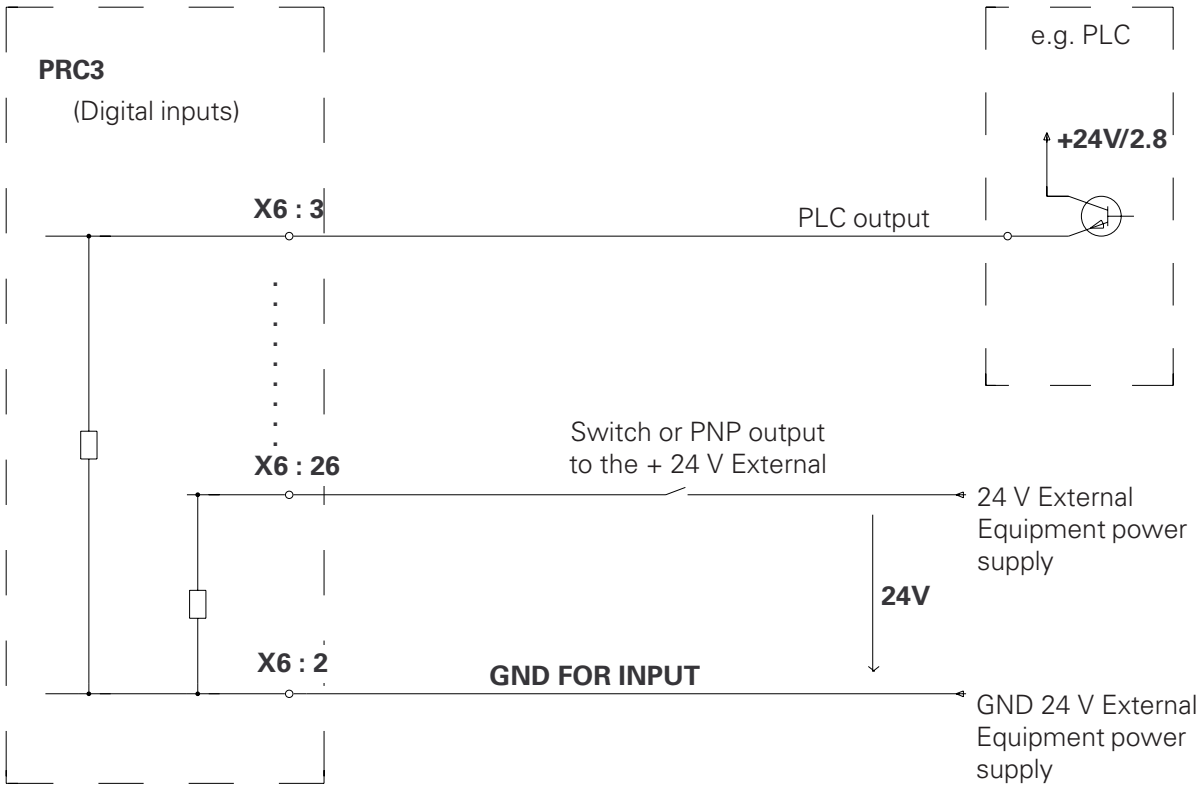

Technical data of the digital inputs :

Nominal value : 24 VDC
For "0" signal : 0-1.6 V
(Negative input voltage, max. -10.0 V)

For "1" signal : 14-30 V
(30 V Permanent, max. 35 V for t<100 ms)

Input voltage : Typically 4.8 mA (at 24 V)

Figure 25.

5.5 Incremental pulse generator connection for synchronization : SYNCH

Synchronization of the conveyor with the reciprocator is not possible with the OptiMove 2 AC version. The control simply places the conveyor cycle, and the preceeding sign (+ or -) of the conveyor cycle at the disposal of a higher control.

Housing version :	Back plane - BP 1	Plug X5
Rack version :	Back plane - BP 2	Plug X5

Plug assignment - X5 SYNCH :

Connection X5	Function	
1	Connection for cable screen	SHIELD
2	Signal reference voltage +24 V	COMMON
3	Increm. pulse generator signal B	Ch. B
4	Increm. pulse generator signal A	Ch. A
5	Power supply output GND	GND OUT
6	Power supply output + 24 V	24 V OUT
7	Power supply output GND	GND IN
8	Power supply input +24 V	24 V IN

The incremental pulse generator signal from the conveyor must be fed through the plug X5. The power supply of the incremental pulse generator is through the plug X5 of the first OptiMove 2.
The power supply of the external incremental pulse generator is fed through the connections X5.7 and X5.8. The filtered voltage (24 V) is available on connections X5.5 and X5.6 and can now be fed through signal leads in a cable to the incremental pulse generator.

Issued 06/00

5.5.1 Electrical specification of the incremental pulse generator for synchronization (Conveyor cycle generation)

An incremental pulse generator with 24 V power supply is foreseen for synchronization. The signal input for synchronization must be controlled by a Pull down stage, therefore the incremental pulse generator must have an NPN or Push-Pull output.

Control principle of the SYNCH inputs:

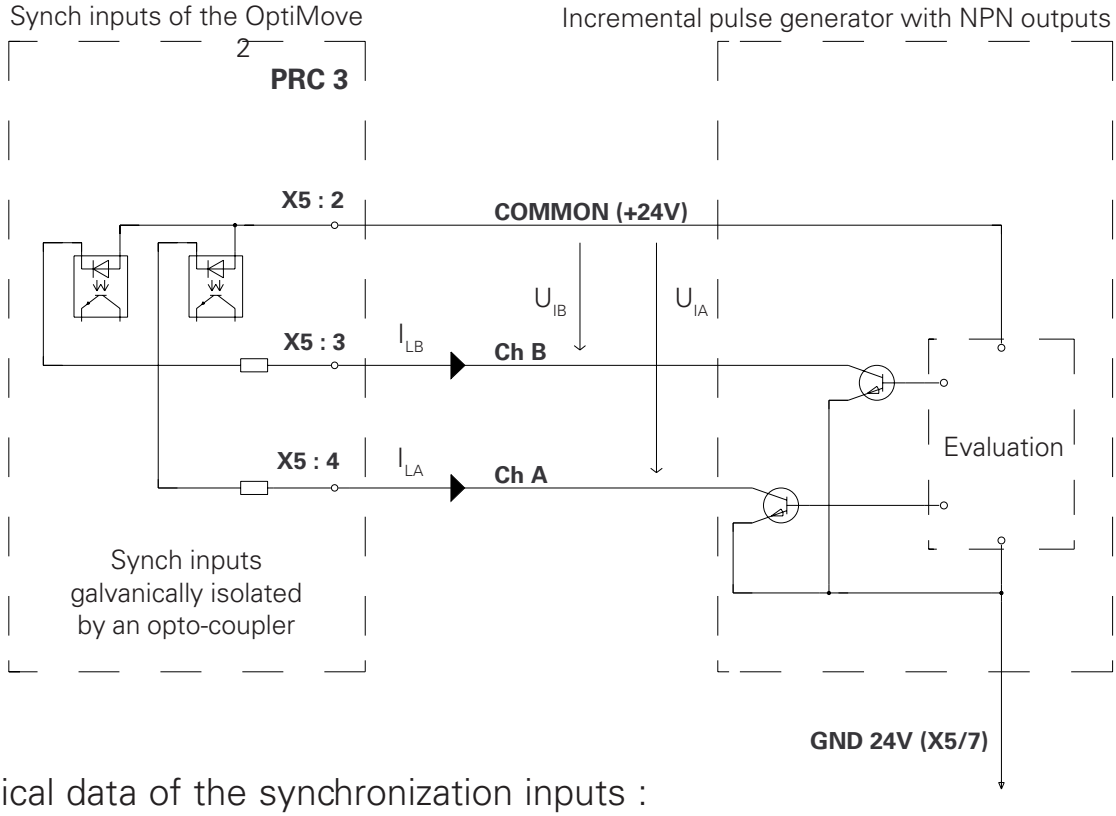

Technical data of the synchronization inputs :

Switching threshold :

$U_{IHmin.}$ = 16.0 V
$U_{ILmax.}$ = 3.5 V

Typical input voltage with UI = 24 V
I_{ITyp} : = 5.3 mA

Maximum input voltage :

$U_{IHmax.}$ = 30 V
(30 V Permanent, max. 35 V for t< 100 ms)

Maximum negative input voltage :
$-U_{IHmax.}$ = 5 V.

Figure 26.

5.5.2 Connection example for the synchronization of multiple axes

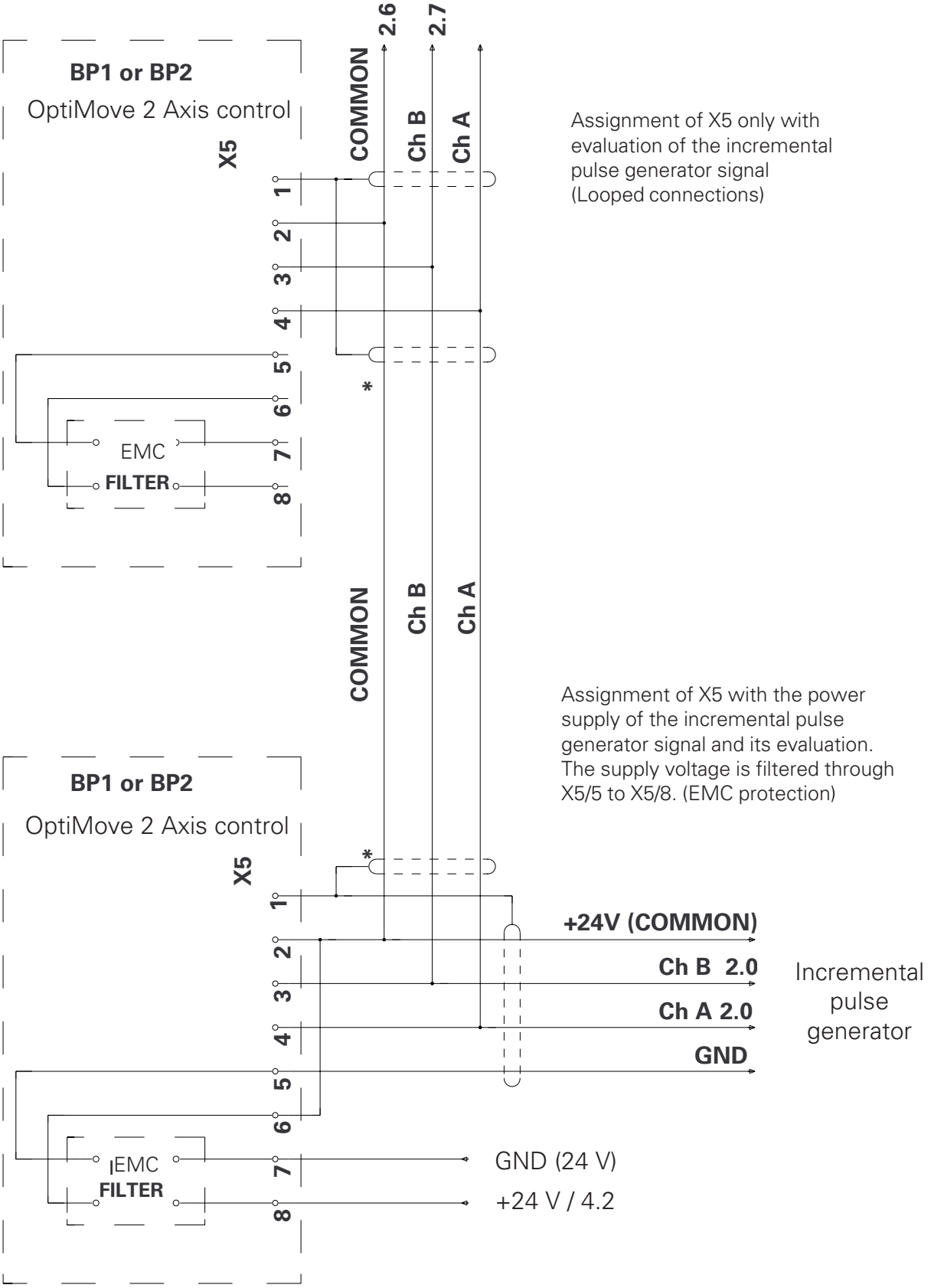

***** Cable screening is not required when the connection is kept short and is separated from other cables. When the cable is placed in a cable channel then cable screening is absolutely essential.

5.6 Positioning - POS

The incremental pulse generator, and the reference switch for positioning are connected to this plug.

Plug assignment - X2 POS Housing version :

X2 Positioning (POS)	
Connection No.	Assignment
6A	GND 24 V POS
6B	+ 24 V POS
7A	Ch. B
7B	Ch. A
9A	Ref. Point

Plug designation - X2 POS : Front view

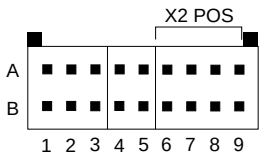

Plug type : Connectral Series 320, 18 pole, 2 row

Figure 28.

Plug assignment - Rack version X3 POS :

X3 Positioning (POS)	
Connection No.	Assignment
1	Shield
2	Ch. A
3	Ch. B
4	Ch. Z*
5	Ref. Point
6	GND 24 V POS
7	GND 24 V POS
8	+24 V POS
9	+24 V POS
Case	Shield

Plug type:
D-Sub Plug
9 pole / female

Signals marked with an ***** are not evaluated

5.7 Drive control - DRIVE

The control signal for the frequency converter is connected to this socket.

Plug assignment - X3 DRIVE Housing version :

Connection No. X3	Function	
1A	Analogue ground for Theoretical value	ANA GND
1B	Analogue ground for Theoretical value	ANA OUT
2A	- Direction of rotation signal (negative)	-SOA
2B	+ Direction of rotation signal (positive)	+SOA
3A	- Activating signal - frequency converter (negative)	-RUN
3B	+ Activating signal - frequency converter (positive)	+RUN

Plug designation - X3 DRIVE : Front view

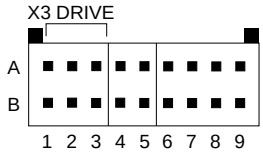

Plug type : Connectral Serie 320, 18 pole, 2 rows

Figure 29.

Plug assignment - X2 DRIVE Rack version :

X2 Positioning (DRIVE)

Connection No.	Assignment
1	Shield
2	+ Ready *
3	+ RUN
4	+ SOR
5	ANA OUT
6	- Ready *
7	- RUN
8	- SOR
9	ANA GND
Case	Shield

Plug type:
D-Sub Plug
9 pole / female

Control principle of the DRIVE Connections :

Example : SOR

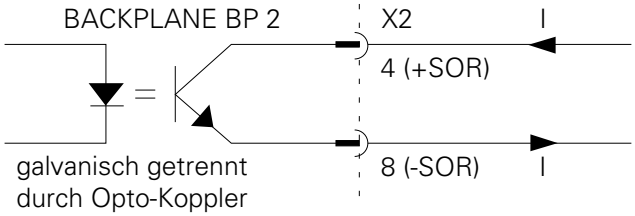

Figure 30.

Signals marked with an * are not evaluated

5.8 Keypad display connections

The keypad and display connection is only possible with the Rack version on the Back plane (BP 2).

Plug Assignment - X9 DISPLAY Rack version :

Connection No. BACK PLANE 2	Connection designation
1	Shield
2	VCC
3	SELECT 1
4	SELECT 2
5	ENABLE
6	DATA
7	CLOCK
8	KEY
9	VCC
10	VCC
11	GND
12	GND
13	GND
14	GND
15	GND

Plug type : 15 pole, female

6. Synchronization of the Conveyor cycle

6.1 Function

An incremental pulse generator for determining the position of the conveyor chain is fitted to the conveyor. The conveyor position is read by the OptiMove 2 Powder Reciprocator Control. The conveyor position is standardized and at the disposal of external controls as the signal - CONVEYOR CYCLE.
The maximum permissible conveyor speed is 6 m/min.

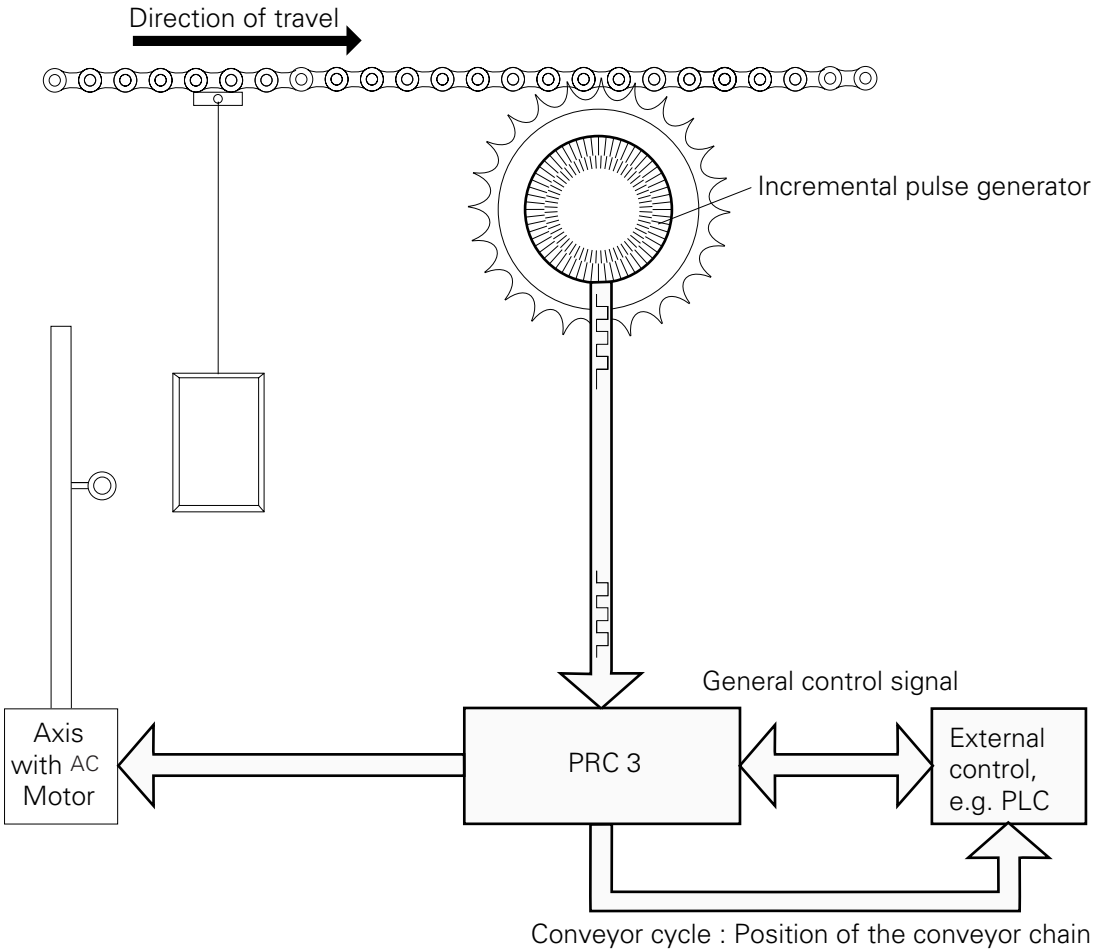

Figure 31.

6.2 Start-up of the conveyor cycle generation

The OptiMove 2 Powder Reciprocator Control already contains all the standard hardware for conveyor cycle generation. Before starting up only the Incremental pulse generator must be fitted and connected to a 24 volt DC power supply.
(See "6.3 Guide lines for fitting the Incremental pulse generator to the conveyor").

The PS 2 supplementary power supply can be used as the power supply for the Incremental pulse generator. A connection position for this unit is already prepared in the Housing version. In the Rack version the board is plugged into the position - 9 TE/4,5 cm.

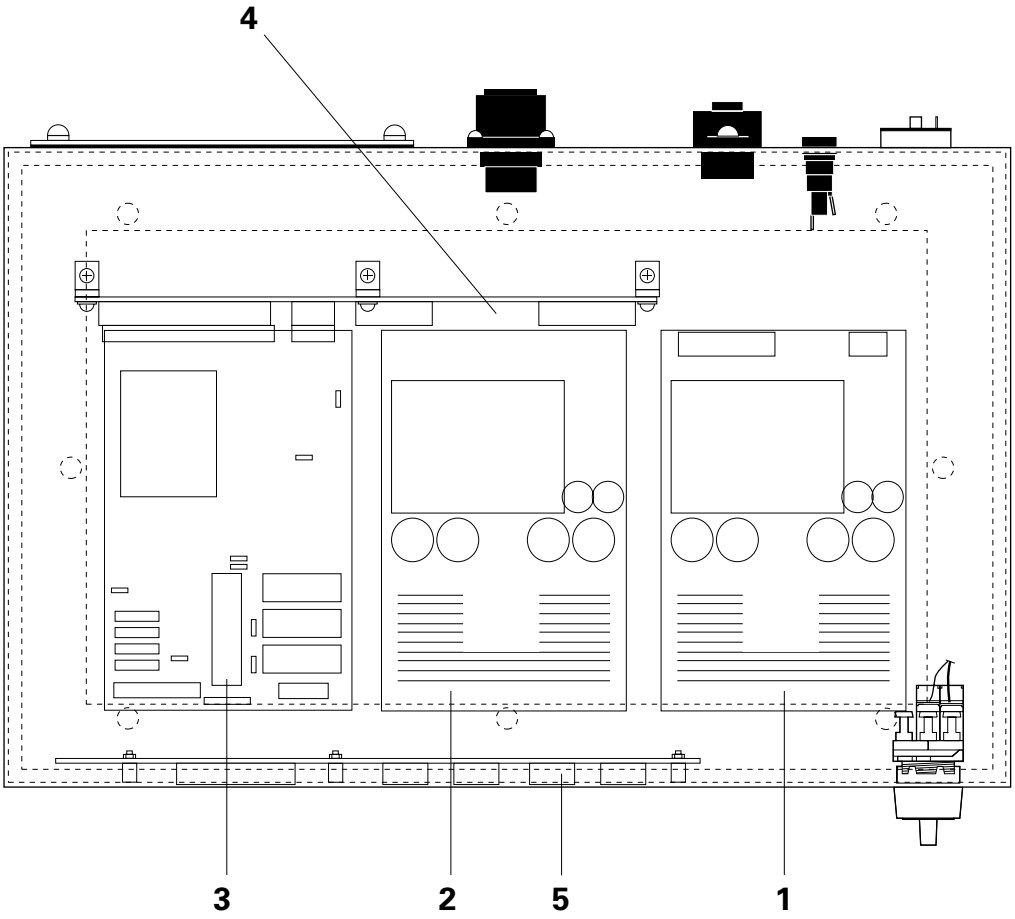

1 Supplementary power supply for SYNCH (PS 2, Order No. 346 160)
2 PS 1 Supply unit for OptiMove 2
3 MICRO 3 Printed circuit board
4 BP 1 Back plane pcb
5 OptiMove 2 Front display

Figure 32.

6.2.1 Contact assignment of the PS 2 supplementary power supply for SYNCH (Conveyor cycle generation)

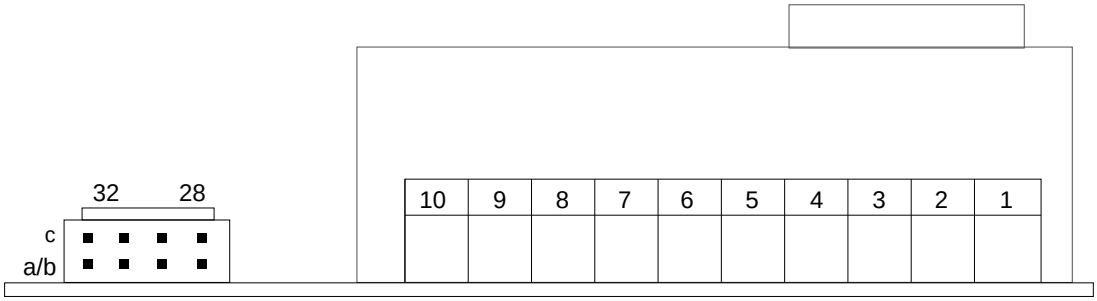

Plug connection for 24 VDC

+24 V : 28a/b and 28c
GND 24 V : 31c and 32c

Connection for the Mains supply und the voltage selection.
The plug und pin assignment is identical for both Back planes - BP 1 and BP 2 (see Chapter 5.1).

Figure 33.

Plug type for 24 V connection :

Front view (Plug contact block)

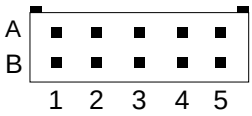

Connectral - Series 320, 10 pole / 2 row

Assignment : 1A : +24 V (corresponds to 28c)
5A : GND 24 V (corresponds to 32c)

Figure 34.

6.3 Guidelines for fitting the incremental pulse generator to the conveyor

For an accurate detection of the chain conveyor position the resolution for the incremental pulse generator (number of pulses/revolution) should be chosen so that the mechanical conversion (Take-off pinion) of the number of increments per dm of the travel range lies within 500-999 pulses/dm. Normally, an incremental pulse generator with 2000 increments per revolution is used. This corresponds to approximately 2.5 to 5 revolutions of the pinion per metre.

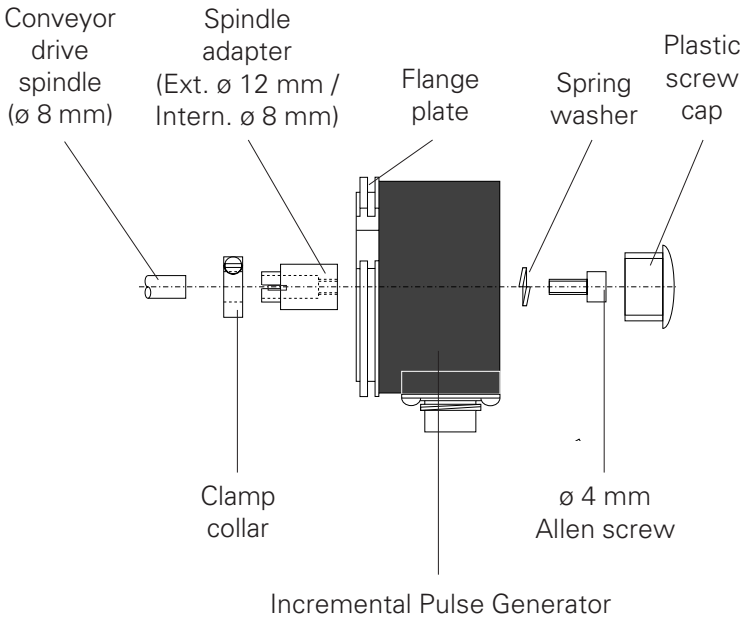

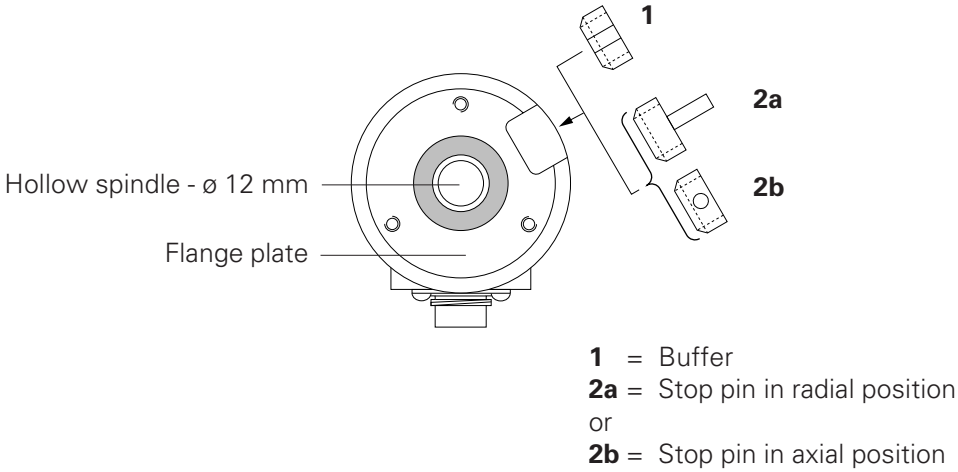

Incremental pulse generator (front view)

Figure 35.

6.3.1 Instructions for fitting the incremental pulse generator

The incremental pulse generator is supplied by GEMA.
In order to guarantee trouble-free operation of the incremental pulse generator, and the whole powder coating booth the following points must be observed thoroughly:

- **never fit** the incremental pulse generator **to the motor spindle**, but only on the drive spindle of the conveyor
- fit the incremental pulse generator **as close to the booth entrance** as possible.
- if the incremental pulse generator is fitted with a **slipping clutch**, fit the incremental pulse generator so that when the chain is stopped because of overloading, **the incremental pulse generator must also stop**.

The incremental pulse generator is fitted either directly onto the drive spindle of the conveyor or with the aid of a spindle adapter (see Fig. 36). If the drive spindle is not ø 8 mm, then a suitable spindle adapter can be ordered.

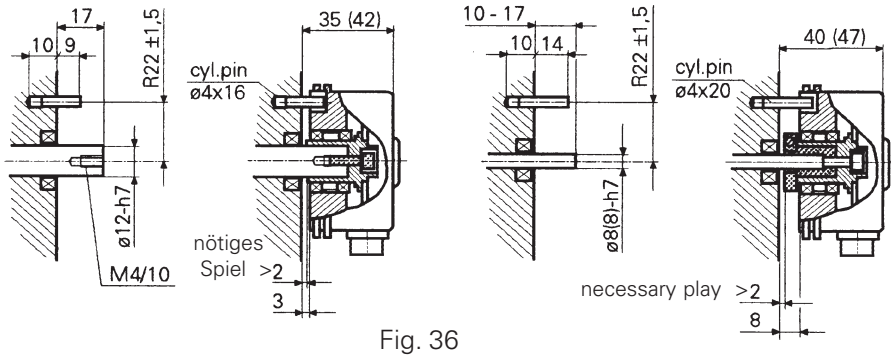

Fig. 36

ATTENTION: **Never fit the incremental pulse generator on an additional fixture supplied by the customer (flange or similar) when the generator is fitted to the drive spindle, even when the spindle is perfectly aligned.**
If the incremental pulse generator is fitted in a different manner to the above mentioned method, always consult a GEMA service centre first.

The rotation of the incremental pulse generator with the drive spindle is stopped by a buffer (**1**) or a stop pin (**2**), which fits onto the fixing flange (supplied by the customer) and into the specially made cut-out in the incremental pulse generator flange plate. It is recommended to stick the torque buffer/stop pin to the flange plate of the incremental pulse generator with commercially available Cyan acrylic adhesive (Sicomet 50 or Loctite 406). The stop pin can be fitted radially (2**a**) or axially (**2b**) depending on how the fixing flange is made.

The electrical connection to the incremental pulse generator is made with the plug supplied (Fig. 36a)

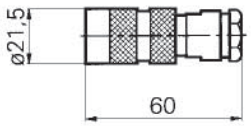

Plug : Type 10 42 36 / IP 64 / Straight type for 5 x 0.34 mm^2 cable

Fig. 36a

6.4 System parameters for conveyor synchronization

System parameters - SP 9, and SP 10 must be set to operate the conveyor synchronization. More information about these settings is found in Chapter 2.11 Setting the System parameters.

Adjustable system parameter settings

Display		Axis data	SPV	Default
5 0 9	SP 9	Incr. pulse generator adjust. (Pulses /dm)	1-9999	583
5 1 0	SP10	Conveyor cycle for PCL (mm)	5-50	10

The system parameter value selected on Start-up may only be changed after consultation with a Gema-Volstatic service centre.
Fill in the actual system parameter values in the corresponding tables in the Appendices.

Example for determining the incremental pulse generator adjustment - SP 9

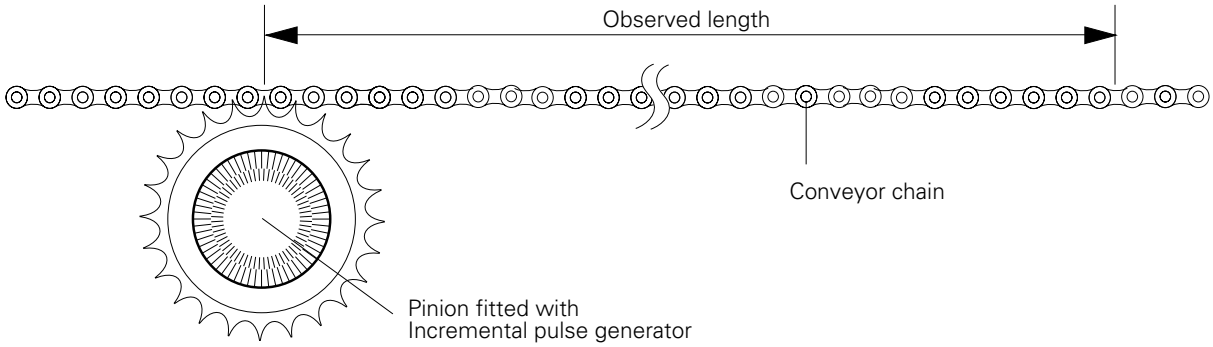

Observed length : l (m)
Number of links of the conveyor in the observed length : N
Number of teeth on the sprocket : n
Resolution of the incremental pulse generator : A (Inc/n)

$$\mathbf{SP\ 9 = \frac{N}{n} \times \frac{A}{l} \times 0.1}$$

Example : l = 1.97 m Æ N = 80
n = 12
A = 200 Inc/n

$$SP\ 9 = \frac{08}{12} \times \frac{2000\ \text{Inc}}{1.97\ \text{m}} \times \frac{0.1\ \text{m}}{\text{dm}} = \frac{676{,}8\ \text{Inc}}{\text{dm}}$$

Input value for System parameter 9 = 677

Figure 37.

6.6 Digital control signals for conveyor synchronization

6.6.1 Conveyor cycle outputs

The OptiMove 2 provides two digital signal outputs for the sequence control to determine the conveyor position.

These are :

CONVEYOR CLOCK :	Conveyor cycle in mm (Resolution by SP 10)
CLOCK SIGN :	Preceding sign (+ or -) of the conveyor cycle

A high pulse, with a constant pulse length of 25 ms, is given over a predetermined distance by the system parameter - SP 10 on the output - CONVEYOR CLOCK. The direction of travel can be determined through the output - CLOCK SIGN.

The system can accomodate a maximum conveyor speed of 6 m/min.

Conveyor cycle output diagrams

Pulse rate on the output - CONVEYOR CLOCK

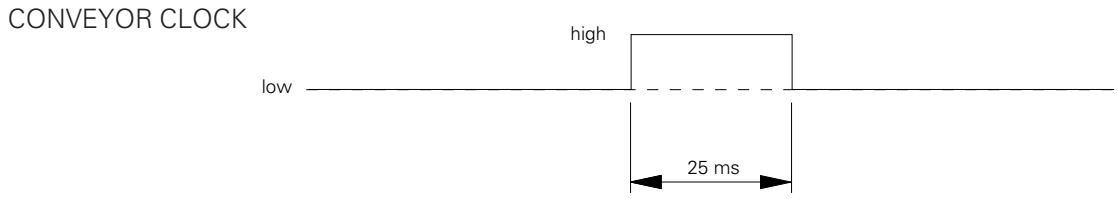

At a maximum conveyor speed of 6 m/min.

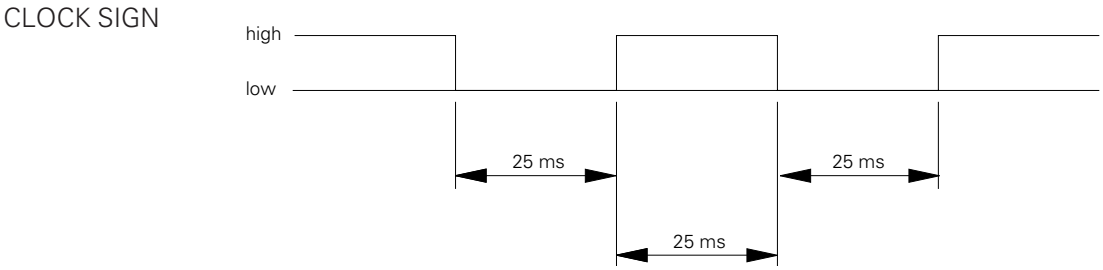

Switch condition of the output - CLOCK SIGN :

CLOCK SIGN = Low => Conveyor runs in reverse
CLOCK SIGN = High => Conveyor runs forwards

Figure 38.

7. Error messages

E01: Incorrect key

The error message - "E01" appears as soon as an incorrect key is pressed. This can happen when the keypad is locked or when a key is pressed in a program level where this is not permitted.
The "E01" message appears on the display for as long as the incorrect key is pressed.

Acknowledgement is not necessary.

E08 : The error message "E08" appears when the Check Sum in the EPROM does not correspond with the actual Check Sum of the operating program.

Acknowledgement : None.

Source of error : EPROM incorrectly "burnt-in".

Course of action : Replace with a new EPROM.

E9 External alarm input is activated / axis locked by digital control input - "EMERGENCY STOP".

Acknowledgement : Not necessary.

Source of error : EMERGENCY STOP is approached (Low).
EMERGENCY STOP is activated by the System parameter - SP 8.

E10 : Reference point not reached

When switching on the axis control "E10" appears on the display.
This message means that the position of the Reference point has not yet been stored. By pressing the key the Travel to Reference point can be released. The Travel to Reference point can also be released digitally through the digital input - "Travel to Reference point".

Acknowledgement : Travel to Reference point with the key in manual operation. In automatic operation the control input "START REF" must be approached.

E11: RAM Reset is carried out.

This message appears when a RAM Reset is carried out .

Acknowledgement : by up-dating the system parameter
(See Chapter 2.11)

E12: System parameter (SP) not set.
This error message appears when the Check Sum is incorrect for all the system parameters. When there is a Check Sum error the SPV (System Parameter Values) are loaded with default values.

Acknowledgement : by pressing the key F a RAM Reset is carried out and the error message - "E11" appears on the display.

Source of error : Replacement of the RAM module
Data loss in RAM

E20: Software end stop is overrun (Synchronization).
This error message appears when the actual position of the axis is greater than the defined software end stop (Software end stop = Upper stroke limit + 10 mm). This error can only happen in the synchronization operation.

Acknowledgement : by pressing the key F

Source of error : The travel distance of the axis when synchronizing lies outside the maximum permissible travel distance (SP 1, SP 2).

E21: Positioning error too large.

Acknowledgement : by pressing the key F

Source of error : No signal from incremental pulse generator.
Axis has run into the end buffer (SP1 incorrectly set)
No theoretical value (ANA, GND, ANA OUT) for the frequency generator

E22: Incremental pulse generator error

Acknowledgement : by pressing the key F

Source of error : Incremental pulse generator is incorrectly connected or not connected at all.

E24 : This error message appears when there is an incremental pulse generator error. (Cable break signals A or B, or A and B)

Acknowledgement : by pressing the key F.

Source of error : No incremental pulse generator signals.

E25 : This error message appears when the direction of rotation of the positioning detection is reversed.

Acknowledgement : by pressing the key [F].

Source of error : Incremental pulse generator signals A and B are reversed.

END : No further program step.
When in the program level - STEP the next STEP should be released with the key [I], and no further STEP (program step) is present, the error message "END" appears until the appropriate key is released.

n.Co : No "Continuous" .

Notes :

Spare Parts List

Ordering Spare Parts

When ordering spare parts for powder coating equipment, please indicate the following specifications :

1. Type, and serial number of your powder coating equipment
2. Order number, quantity, and description of each spare part.

Example :

1. **Type** OptiMove 2, **Serial no. :** xxx xxx
2. **Order no. :** 227 161, 5 pieces, Fine wire fuse.

When ordering cable and hose material the length required must also be given.
The spare part numbers metre/yard ware is always marked with an *****.

All wear parts are marked with a **#**.

All dimension of plastic powder hoses are given with external and internal diameters :
e.g.
ø 8 / 6 mm = 8 mm outside diameter (o/d)/ 6 mm inside diameter (i/d).

Issued 06/00

OptiMove 2 Powder Reciprocator Control

Control unit, Housing version (complete)

1	Control board - Micro 3 (PBC)	344 257
2	EPROM 3.XX.2 - AC	349 321
3	512 kB RAM for program memory	240 974
4	PS 1 Power supply (PBC)	340 383
5	Front display for OptiMove 2	342 904
6	BP 1 Back plane (PBC)	342 785
7	Main switch	235 911
8	Lamp element	235 920
9	Contact element	235 938
10	Fuse holder	200 131
11	Fuse - 0.25 AT - 200-240 V	227 161#
	Fuse - 5.0 AT - 200 -240 V	200 166#
	Fuse - 0.5 AT - 100 - 120 V	201 073#
	Fuse - 10AT - 100 - 120 V	200 174#
12	Cable with plug	303 607
13	Bulb -130 V / 20 mA	203 688#
X	PS 2 Power supply board (PBC) (Incremental pulse generator supply for Synchro)	346 160

Wear Parts

Issued 06/00

OptiMove 2 Powder Reciprocator Control

Control unit, Housing version (complete)

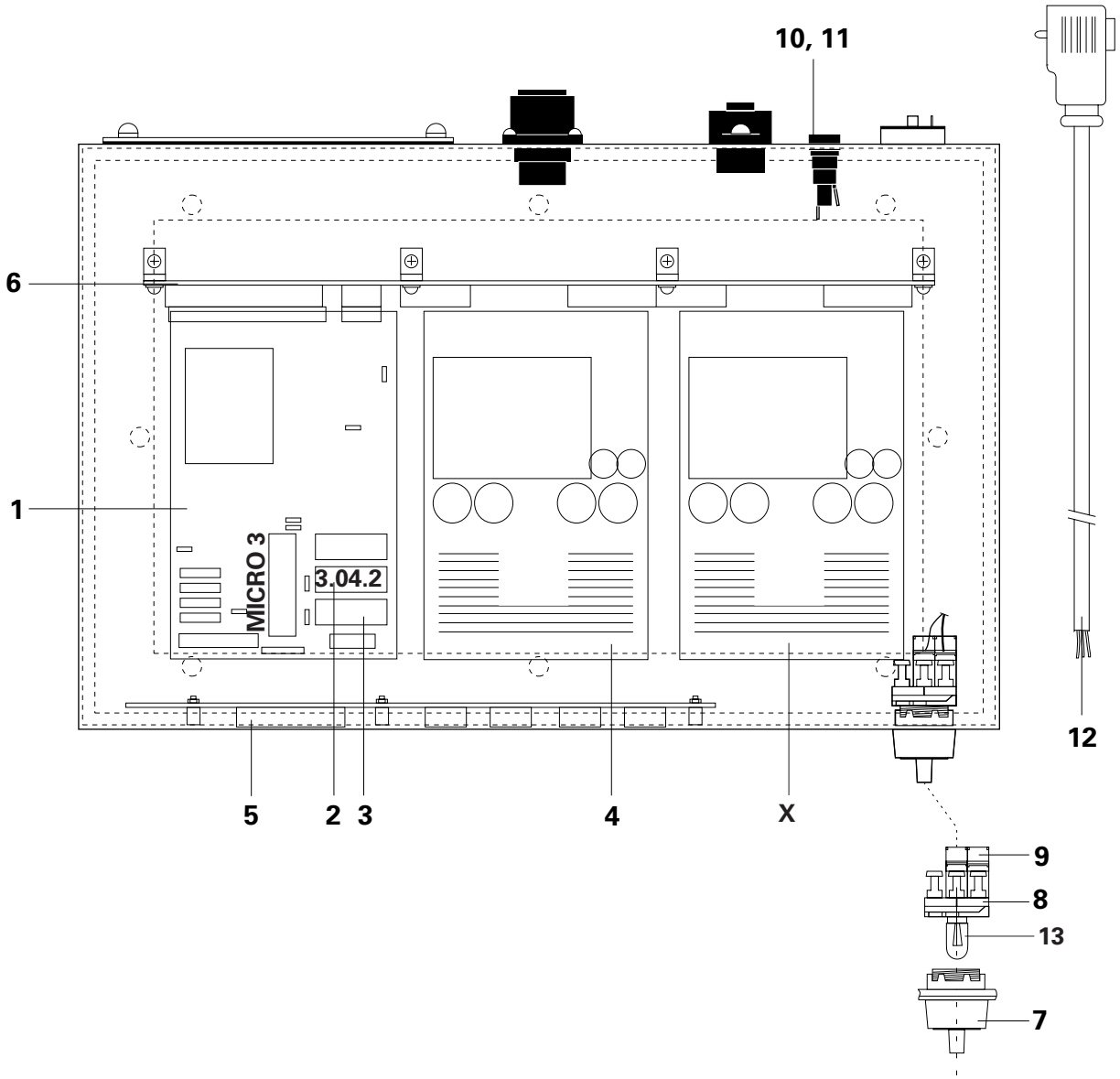

Figure 1.

OptiMove 2 Powder Reciprocator Control

Rack version - BP 2 Back plane

1	BP 2 Back plane (PBC - Mounted in a Switch cabinet)	347 191
13	Micro 3 Control board (PBC) for OptiMove 2	344 257
14	PS 1 Power supply board (PBC) for OptiMove 2	340 383
	PS 2 Power supply board (PBC)	346 160
	Mounting frame for display print	349 186

Issued 06/00

OptiMove 2 Powder Reciprocator Control

Rack version - BP2 Back plane

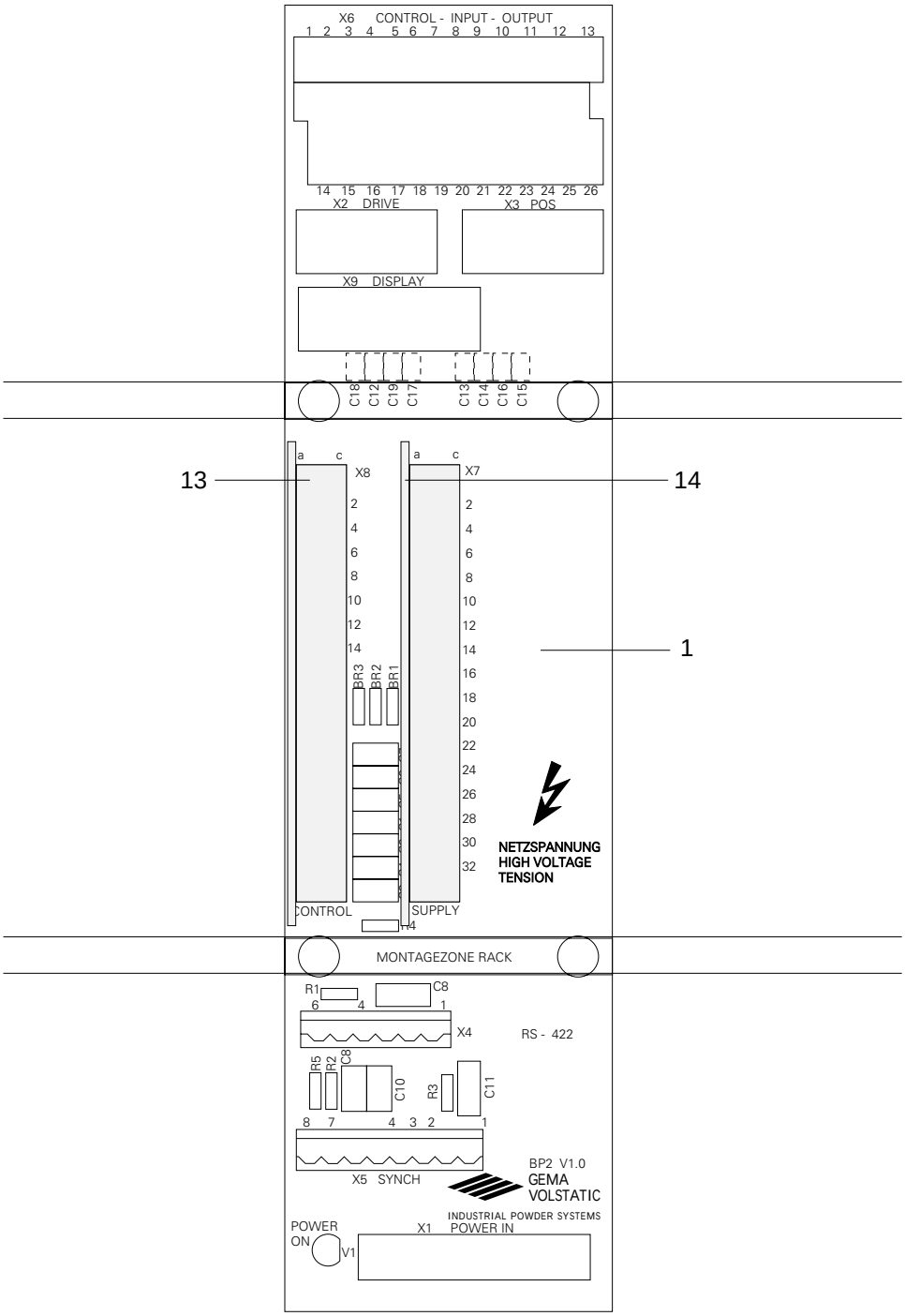

Figure 2.

Table for system parameters

Fill in the new values of the system parameters for later reference here.

Display symbol	System parameter	Value	Value	Value	Value
401	SP 1				
402	SP 2				
403	SP 3				
404	SP 4				
405	SP 5				
406	SP 6				
407	SP 7				
408	SP 8				
409	SP 9				
410	SP 10				
	Date :				

Actual Software version :

Date :	Equipment specification :	Software version :
		PRC 3 . __ __ . __

(For software version, see Chapter 2.10)

Issued 06/00

OptiMove 2 Program parameters

Prog. no.	Customer	Object	Posit. U	Speed -	Dwell time o	Func. start F	Func. end 7	Prog. addr. A
1								
2								
3								
4								
5								
6								
7								
8								
9								
10								
11								
12								
13								
14								
15								
16								
17								
18								
19								
20								
21								
22								
23								
24								
25								
26								
27								
28								
29								
30								
31								
32								

Photocopy this side for later use.

Issued 06/00

OptiMove 2 Program parameters (continued)

Prog. no.	Customer	Object	Posit. U	Speed -	Dwell time o	Func. start F	Func. end 7	Prog. addr. A
33								
34								
35								
36								
37								
38								
39								
40								
41								
42								
43								
44								
45								
46								
47								
48								
49								
50								
51								
52								
53								
54								
55								
56								
57								
58								
59								
60								
61								
62								
63								
64								

Photocopy this side for later use.

Issued 06/00

MICRO 3 Control board configuration possibilities

X20 : Power supply for position detection

A : Power supply for position detection from the 24 V supply (standard)

B : Power supply for position detection from the 15 V supply

X21 : Locking of the RS 422 serial interface

A : Circuit termination active

B : Circuit termination inactive (standard)

X22 : Front display type

A : 7 digit Front display

B : 5 digit Front display

X23 : Adaptation of the EPROM

A : 256 kB EPROM (27c - 256)

B : 512 kB EPROM (27c - 512)

X24 : Is not evaluated (always in Position A!)

X25 : Is not evaluated (always in Position A!)

X26 : Adaptation of the RAM

A : 16 kB RAM (DS 1220y, 2 k x 8 Bit)

B : 64 kB RAM (DS 1225y, 8 k x 8 Bit)

X27 : Activating signal of the circuit termination (RUP)

A : direct (RUN during Reset on Low)

B : inverse (RUN during Reset on High)

INT0 : Release of the system interrupt - 0

ON : Interrupt 0 released (OptiMove 1, OptiMove 2)

OFF : Interrupt 0 locked (PRC 1, MRC, BC)

INT1 : Release of system interrupt - 1

ON : Interrupt 1 released (OptiMove 1, OptiMove 2)

OFF : Interrupt 1 locked (PRC 1, MRC, BC)

Issued 06/00

EPROM / Software Version

Software version	Date of Change	New Function	Error correction
PRC 3.01.2			
PRC 3.02.2	February 1994	Function output (End)	
PRC 3.03.2	June 1994	System parameter SP6: New acceleration range - 0.700-2.500 m/s^2	
PRC 3.04.2	October 1994	Minimum speed to 0.05 m/s	

Please note with which EPROM or Software version your control unit is equipped.
When ordering a replacement EPROM the latest version will always be sent.

Documentation OptiMove 2 - AC

Printed in Switzerland

Issued 06/00