E

Operating Instructions and Spare Parts List

OptiMatic 2
Automatic Powder System
(AS02)

Translation of the original operating instructions

Gema

Table of Contents

Issued 11/02

1. Fields of application

The OptiMatic 2 automatic powder system with Gema automatic powder guns is especially designed to meet the demands of production line applications in both manufacturing, and custom electrostatic coating installations, where reliability in automated working, comfortable operation, and safety are the outstanding advantages to the user. The flexible, modular structure of the OptiMatic 2 is readily adaptable to any changes in your installation.

Interlocking

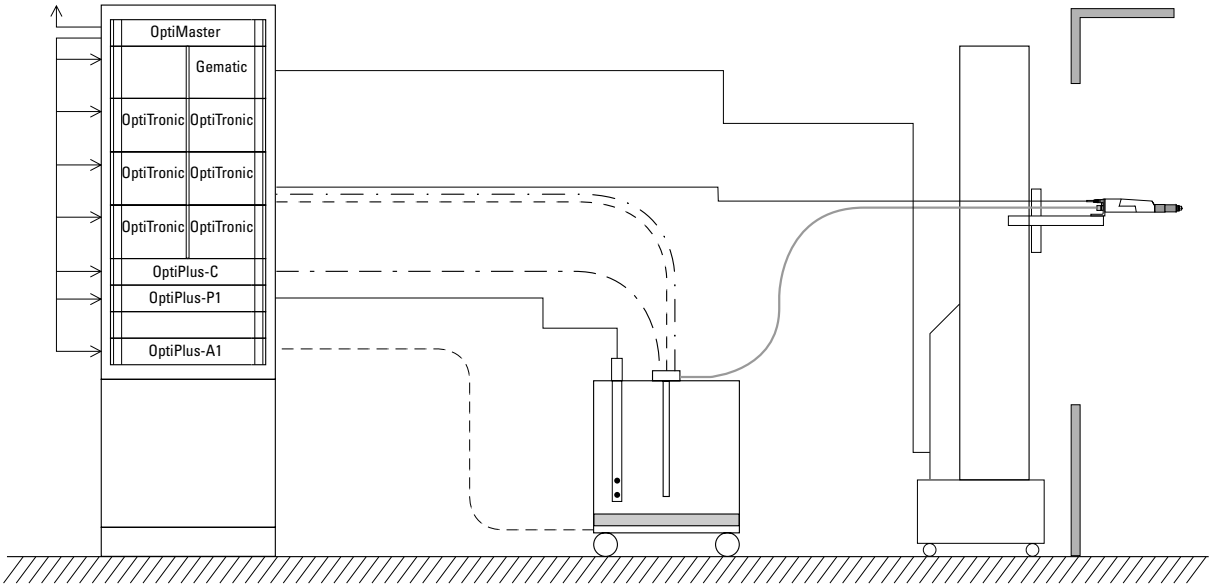

Control modules | Powder hopper with level sensor | Reciprocator | Guns

Fig. 1

2. Scope of delivery

The scope of delivery depends on the number and composition of the modules (see above).

It is extremely important to follow the **"assembly instructions"** in this manual, and the operating instructions supplied with every control unit, when setting up and operating the OptiMatic 2 System.

Issued 11/02

3. Designation

OptiMatic-2

Atomizer	**OptiGun A(X)**	
	OptiGun AE	**E**namel
	PG 2-A(X)	
	PG 2-AE	**E**namel
Controls	**OptiMaster**	Powder Master Control **(CM01 / 02)** (for fluidized powder hoppers)
	OptiTronic	Powder Gun Control **(CG02)**
	Gematic	Powder Reciprocator Control **(CR03)**
	OptiPlus-A2	Pneumatic / Fluidizing Unit **(CA01)**
	OptiPlus-C1	Hose Rinsing Control **(CC01)** (Individual rinsing)
	OptiPlus-C2	Hose Rinsing Control **(CC02)** (Group rinsing)
	OptiPlus-P1	Fresh Powder Control **(CP01)**
Injectors	**OptiFlow**	Powder Injector **(IG02)**
	PI 3-V	**P**owder **I**njector - **V**ertical connections
	PI 3-H	**P**owder **I**njector - **H**orizontal connections
	PI 4-V	**P**owder **I**njector - **V**ertical connections with a rinsing air connection
	EI 1-V	**E**namel **I**njector - **V**ertical connections
	EI 1-H	**E**namel **I**njector - **H**orizontal connections
Powder hoppers	**PH 4-1**	
	PH 50-2/4/8	
	PH 100-12	
	PH 150-24	
	PH 200-32	

Number of injectors
Capacity in litres

Issued 11/02

4. General information

This is general information, for more detailed information see corresponding Operating Instructions

4.1 Mains supply

- The Mains supply is the local voltage. See also Wiring diagram
- The mains frequency can be 50 or 60 Hz.
- Adding the connected load of the individual units together gives the total connected load for the complete system.
- All electrical components correspond to the IP 54 type of protection.

4.2 Compressed air

- The equipment only requires a compressed air supply on the main compressed air network (Main air input and compressed air distributor)
- An OptiPlusA1 unit is always fitted to monitor the fluidizating air.
- The following values for compressed air must be maintained :

Input pressure :	6-10 bar
Max. water vapour :	1.3 g/m^3
Max. oil vapour :	0.1 mg/kg

⚠IMPORTANT

For a faultless functioning of the OptiTronic Control units CG02 the main compressed air input pressure must be set at exactly 5.0 bar. Pressure regulator/Filter unit is placed at the rear of the OptiMatic 2 control cabinet .

5. Setting up the OptiMatic-2 Automatic Powder System

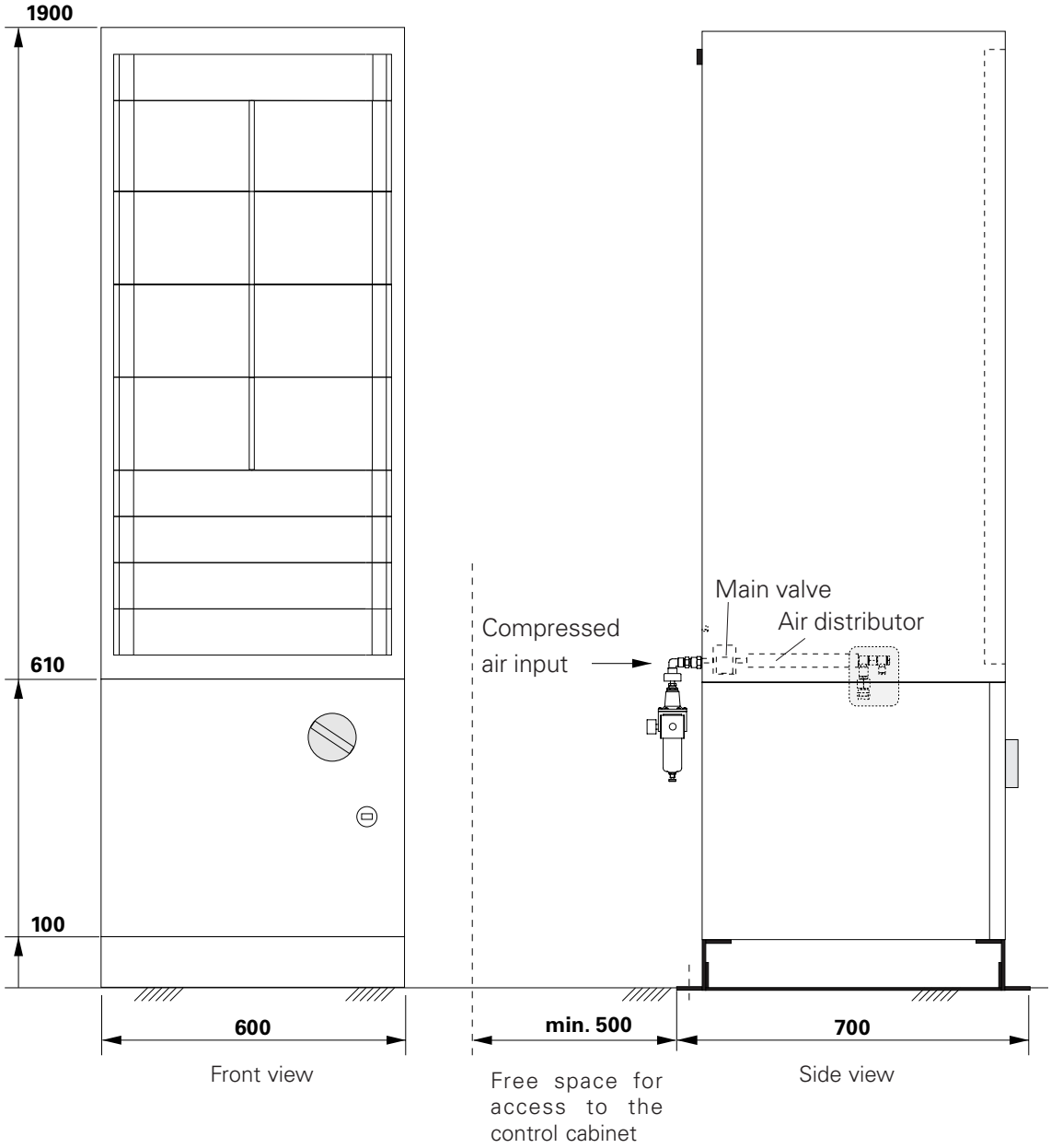

Fig. 2

5.1 Possibilities

- Up to 13 control module units can be fitted.
- OptiMatic 2 cabinets can only be mounted side by side (without a gap) or with one side against a wall.
- Openings which are not used should be sealed with a coverplate. When the OptiMatic 2 system is extended the coverplate can easily be unscrewed.

Issued 11/02

5.2 Assembly instructions

- After unpacking and assembling the OptiMatic 2 System the control cabinet must be fitted to the floor with the steel bolts supplied. The fixing holes are found in the base at the rear of the cabinet.
- Internal connections have already been made at the factory, connections to control units of external plant must, however, be made before starting up. The connection possibilities for individual control units are found in the accompanying operating instructions.
- When connecting the pneumatic hoses in the control cabinet their lengths, and radii should be specially taken into account!

5.3 OptiTronic Control CG02 Power Supply

⚠ **NOTICE**

OptiTronic Control CG02 may only be connected to a 24 VDC power supply.

The OptiTronic Control units are only suitable for power supplied from a special Power Main Board. The Power Main Board can be fitted with a maximum of 12 power modules (1 power module per OptiTronic).
When retrofitting the equipment with each OptiTronic Control unit a further Power module has to be ordered, which can be easily inserted onto the Power Main Board.

6. Electrical diagrams

6.1 Block diagram: OptiTronic Control System without CANBus

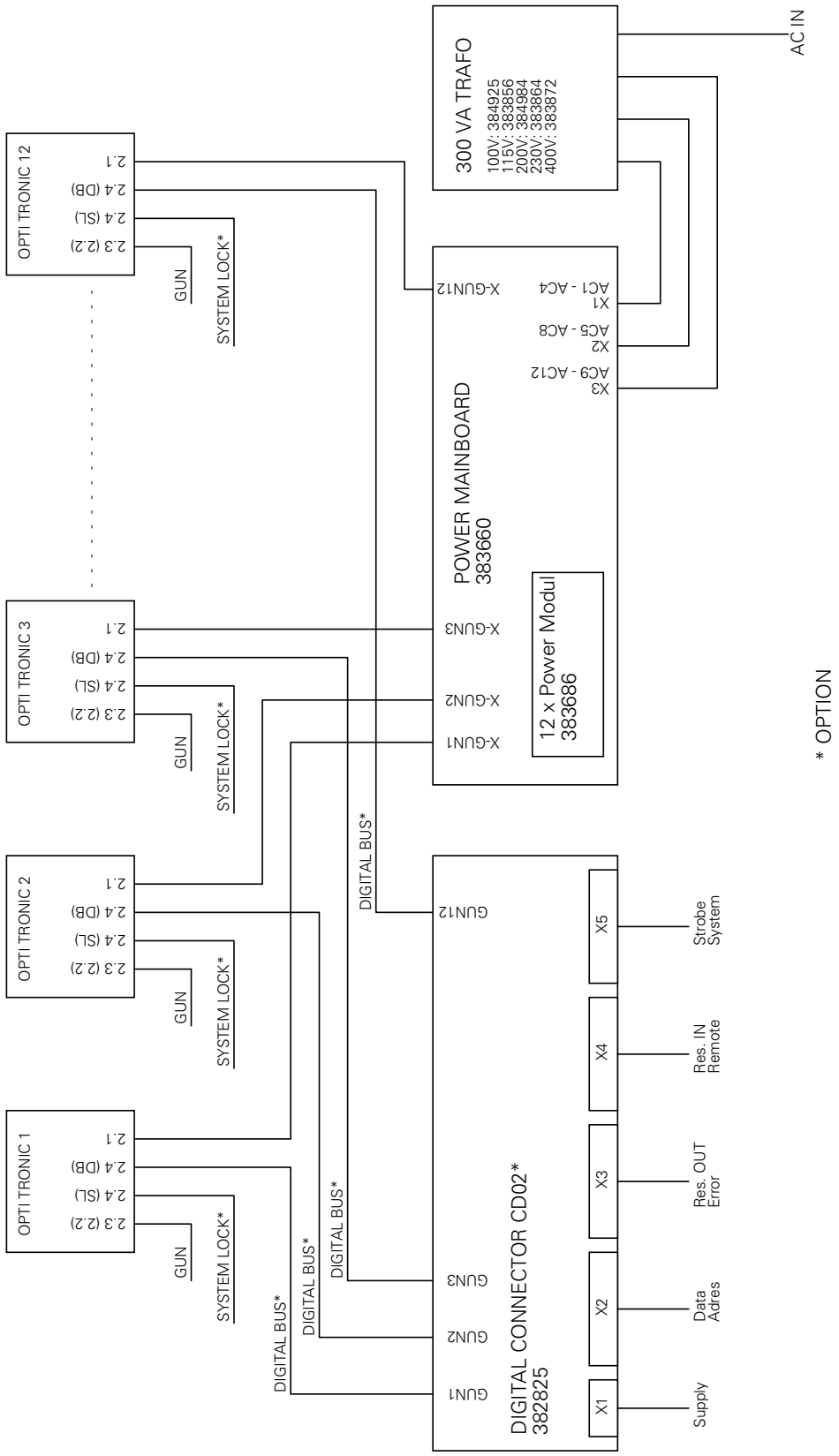

Fig. 3

6.2 Digital Connector CD02: Connections X1-X5

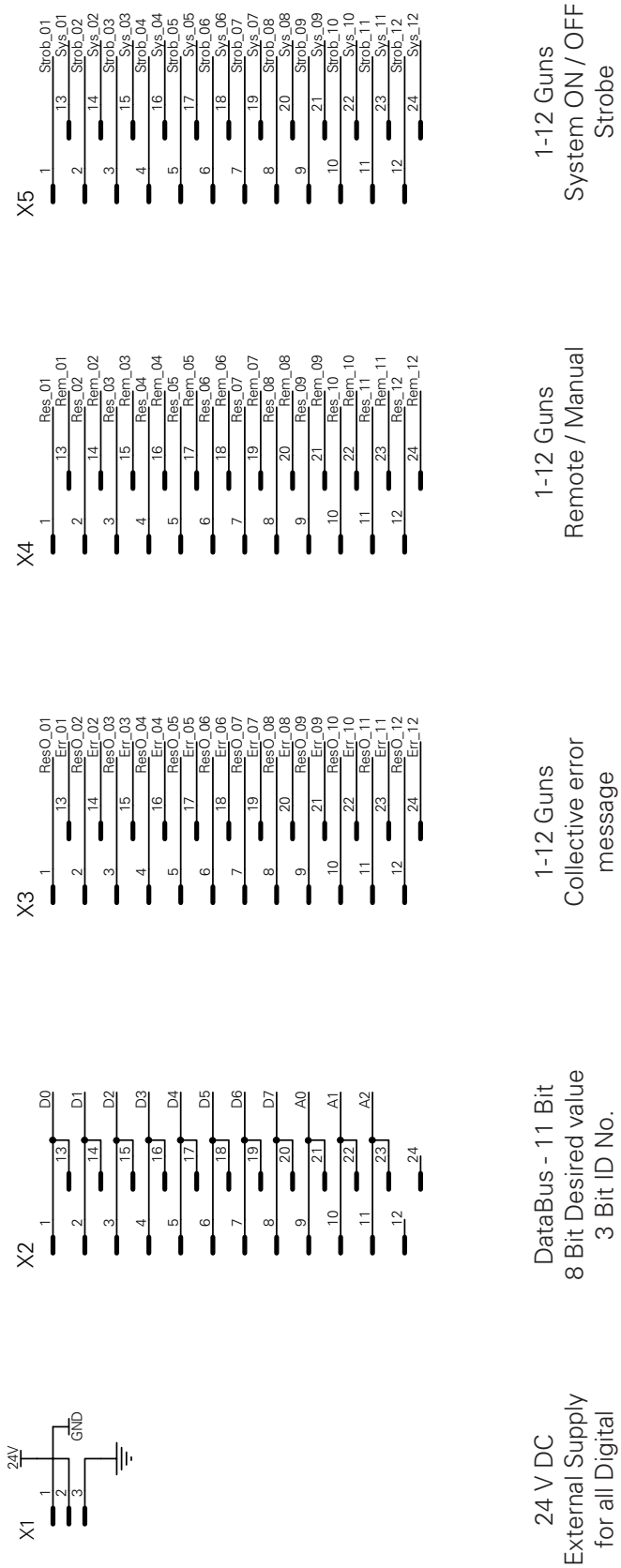

Fig. 4

6.3 Block diagram - Power Main Board for OptiTronic Control unit CG02

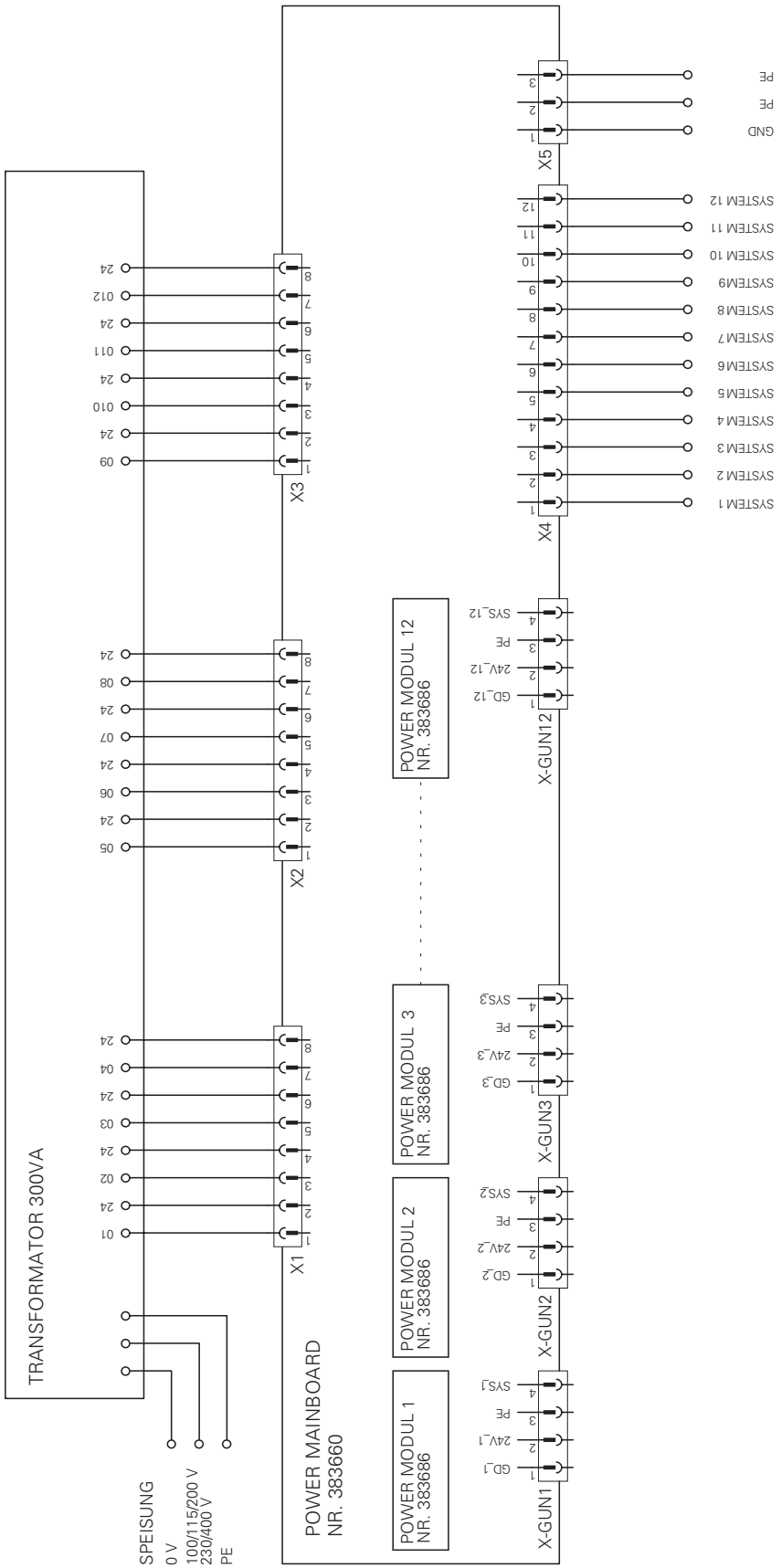

Fig. 5

7. Spare Parts List

7.1 Ordering Spare Parts

When ordering spare parts for powder coating equipment, please indicate the following specifications :

1. Type, and serial number of your powder coating equipment.

2. Order number, quantity, and description of each spare part.

Example :

1. Type :	OptiMatic-2	**Serial no :**	XXXX XXXX
2. Order no :	234 265	1 piece,	Sealing gasket

When ordering cable or hose material the length required must also be given. The spare part numbers of this yard/metre ware is always marked with an *****.

The spare part number of yard/metre ware always begins with 1.. ... .

All wear parts are marked with a **#**.

All dimensions of plastic hoses are given as external and internal diameters :
e.g. ø 8 / 6 mm = 8 mm outside diameter (o/d) / 6 mm inside diameter (l/d).

Issued 11/02

7.2 OptiMatic-2 - Switch Cabinet

1	Drawer holder - large (left)	380 890
2	Roller guide (left)	342 041
3	Escutcheon plate - small	341 991
4	Door lock	239 887
5	Key (for items **4** and **9**)	259 908
7	Drawer holder - large (right)	380 881
8	Roller guide (right)	342 050
9	Door lock	239 887
11	Rear wall panel	341 606
13	Stud	302 198
15	Pressure regulator/Filter unit -complete (*see also page 12*)	381 721
16	Double adapter - 1/2"	343 170
17	Clamp nut - 1/2"	239 884
18	Solenoid valve - 24 VAC	264 423
	Solenoid valve - 24 VDC	on request
	Solenoid valve - 230 VAC	259 500
	Solenoid valve - 110 VAC	on request
19	Double adapter - 1/2"	202 436
20	Distributor block - 10x ø 8 mm	343 250
21	Air connection ring - 3/8"	241 970
22	Double adapter - 3/8"	242 020
23	Cap nut - 3/8"	203 157
24	Hose nipple - ø 10 mm	203 165
25	Solaflex hose - ø 16 / 10 mm	100 498*
26	Hose clamp ring	203 386
27	Air connection adapter - 3/8"	241 997
28	Air connection ring - ø 8 mm	241 989
29	Air connection adapter - 3/8"	242 004
30	Plug - ø 8 mm	238 023
31	Plug screw	203 319
32	Cover plate - for large drawer unit	380 903
33	Floor plate - for large drawer unit	380 920
34	Front plate - large	380 911
35	Drawer holder - small (left)	342 009
36	Drawer holder - small (right)	342 017
40	Mounting plate - empty [1]	345 490
41	Mounting plate - empty[1]	368 660
42	Mounting plate - empty[1]	346 276

***** Indicate length required
[1] For electrical components see accompanying wiring diagram

Issued 01/05

OptiMatic-2 - Switch Cabinet

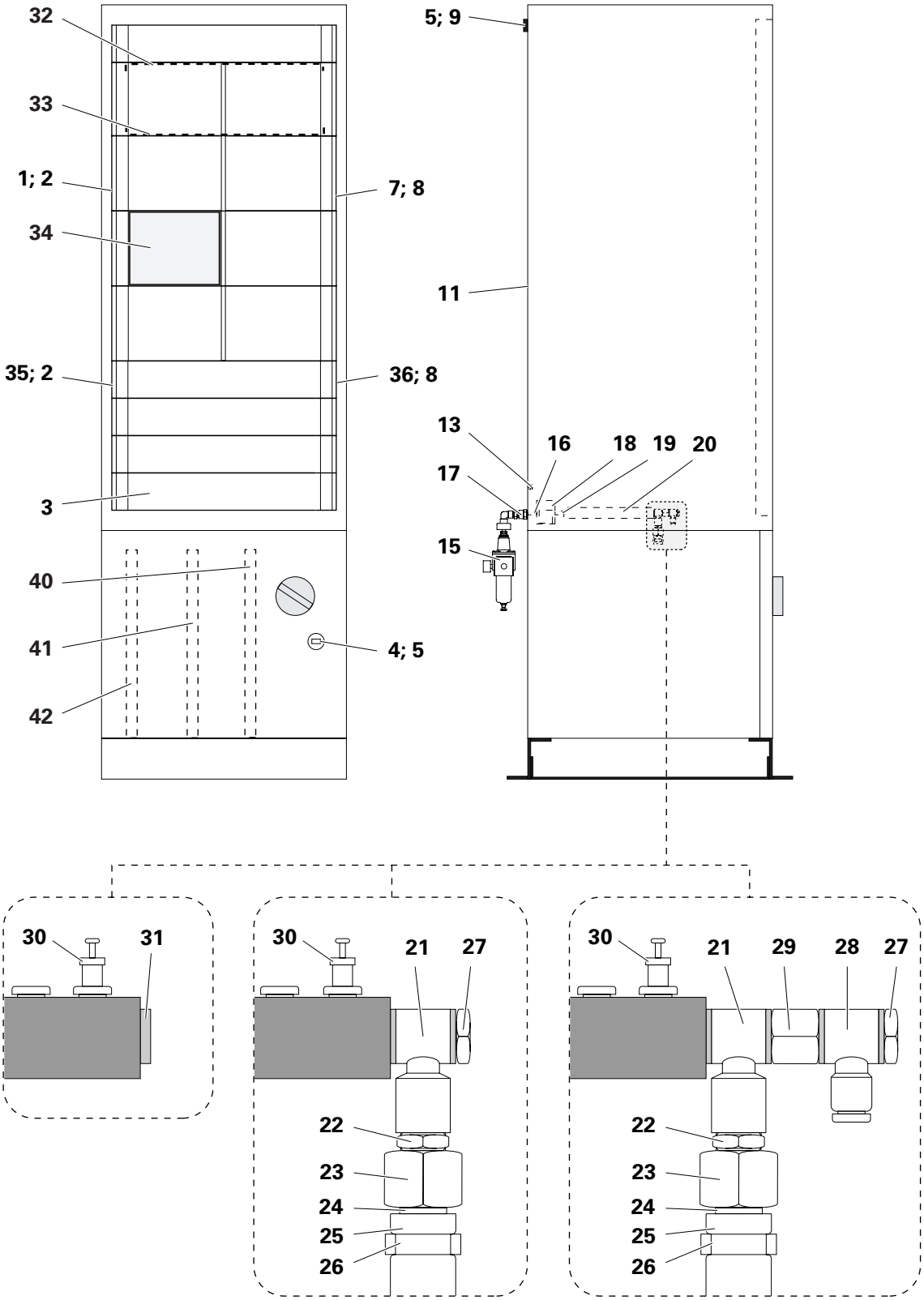

Fig. 6

7.3 Pressure regulator/Filter unit

	Pressure regulator / Filter unit - complete	381721
1	Filter unit - G1/2	262943
2	Pressure regulator - 0.05-10 bar	262935
3	Pressure gauge - 1/8"a - 0-10 bar	259179
4	Adapter - 1/2"i -1/2"i	202622
5	Adapter - 1/8"i -1/4"a	231932
6	Double nipple - 1/2"a -1/2"a	243540
7	Double nipple - 1/2"a -1/2"a detachable	243582
8	Double nipple - 1/2"a x150 mm	602183
9	Adapter - 1/2"a -1/2"i	223166
10	Adapter - 1/2"i-1/2"i	252867
11	Hose connection - D17.0 mm-1/2"a	223069
12	Plug screw - 1/4"a	258695

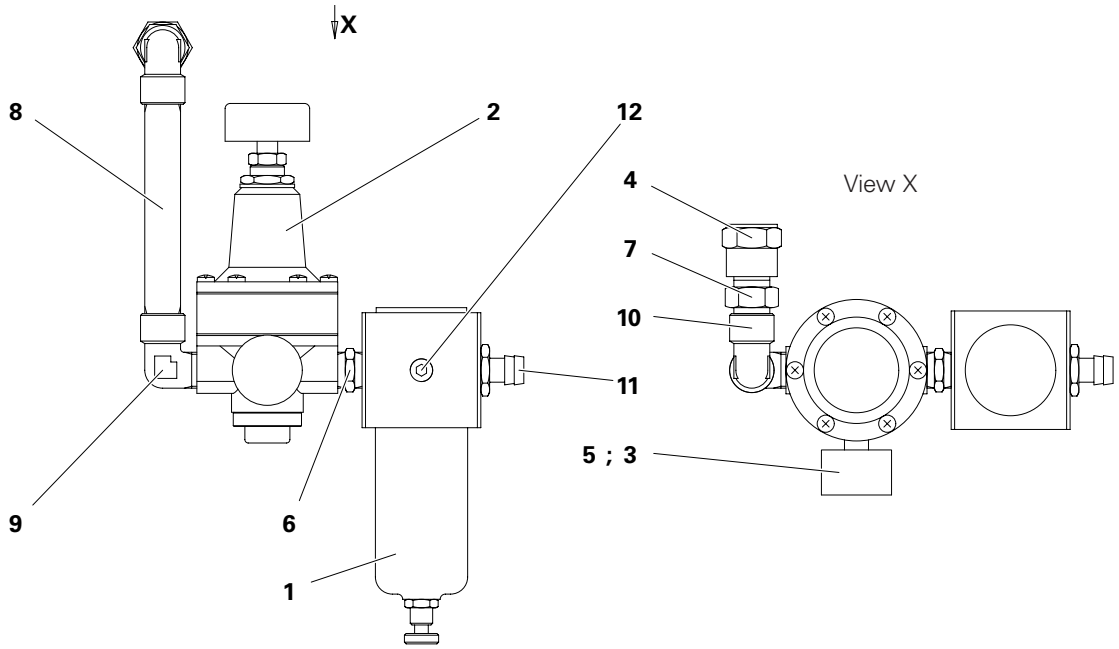

Fig. 7

7.4 Power Main Board

1	Power Main Board - for 12 guns	383 660
2	Power Module - 1x per gun	383 686
3	Transformer - 300 VA (prim. 100 V) for 12 guns	384 925
	Transformer - 300 VA (prim. 115 V) for 12 guns	383 856
	Transformer - 300 VA (prim. 200 V) for 12 guns	384 984
	Transformer - 300 VA (prim. 230 V) for 12 guns	383 864
	Transformer - 300 VA (prim. 400 V) for 12 guns	383 872
	OptiTronic CG 02 Power supply cable - 5m	381 756
	OptiTronic CG 02 Power supply cable - 20m	382 000

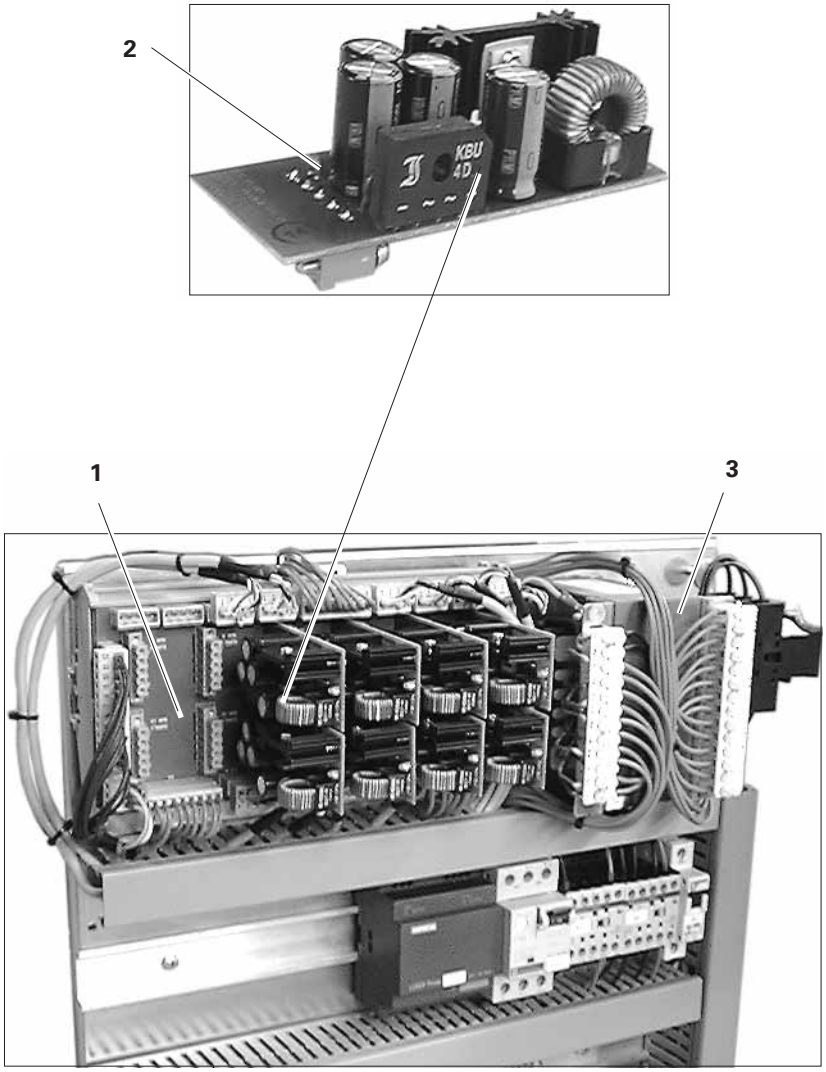

Fig. 8

7.5 CD02 DigitalConnector

1	CD02 Digital Connector - for 12 guns	382 825
2	Digital cable - 19 pin - 4.5 m	1000 934
	Digital cable - 19 pin - 5.5 m	1000 935
	Digital cable - 19 pin - 6.5 m	1000 936

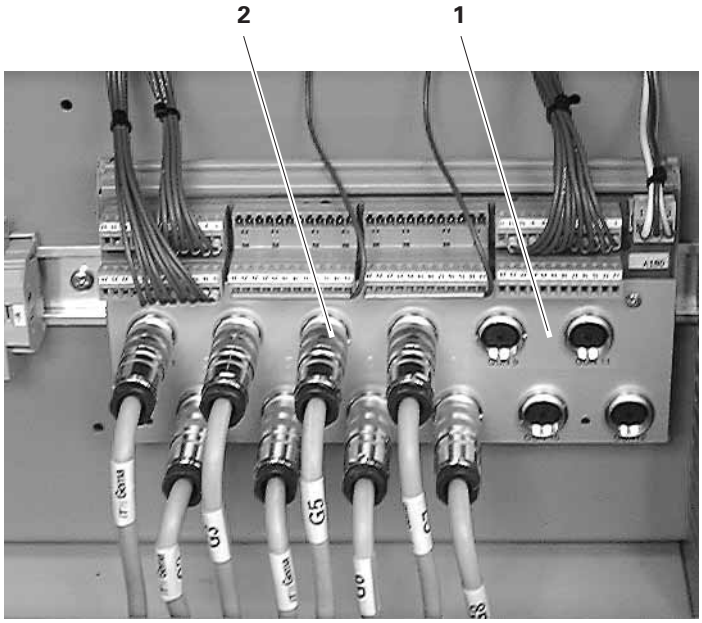

Fig. 9

7.6 OptiMatic 2: Grounding connection

4	Studding - M6x50 mm	301 159
5	Nut	200 417
6	Washer - M6	200 476
7	Shakeproof washer	200 450#
8	Grounding cable	301 140
9	Milled nut	200 433

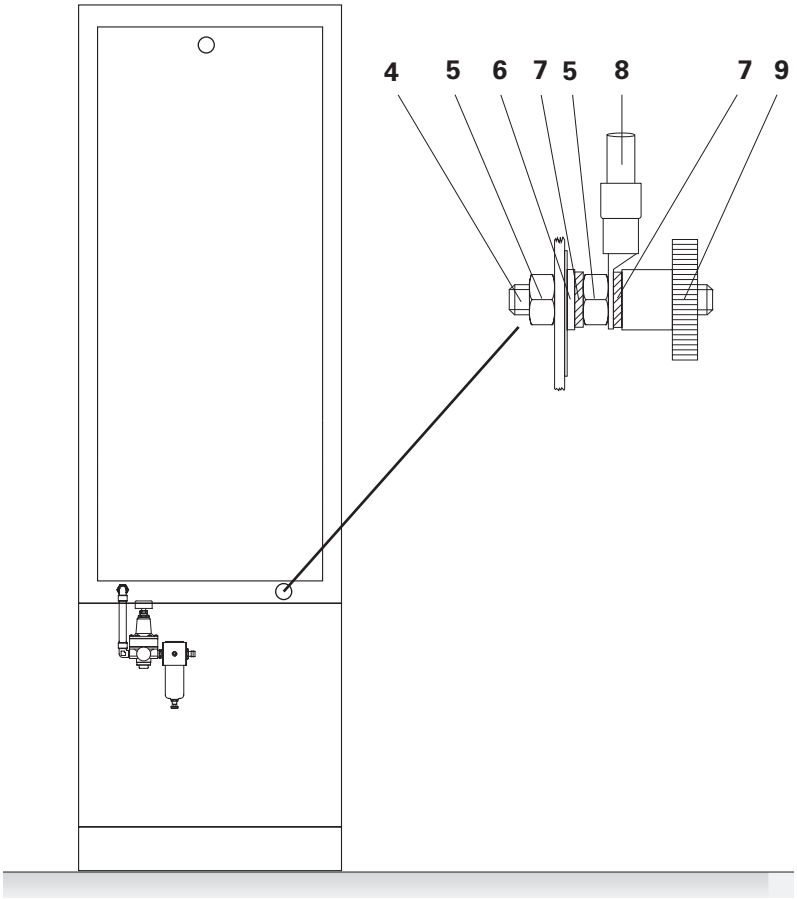

Rear view

Wear Part

Fig. 10

Printed in Switzerland

Gema Switzerland GmbH
Mövenstrasse 17
9015 St.Gallen
Switzerland

Phone: +41-71-313 83 00
Fax: +41-71-313 83 83

E-mail: info@gema.eu.com
Internet: www.gemapowdercoating.com

Issued 11/02