Rev. 00

1011 512 **En**

Operating instructions and Spare parts list

Pneumatic-fluidizing unit OptiAir CA12

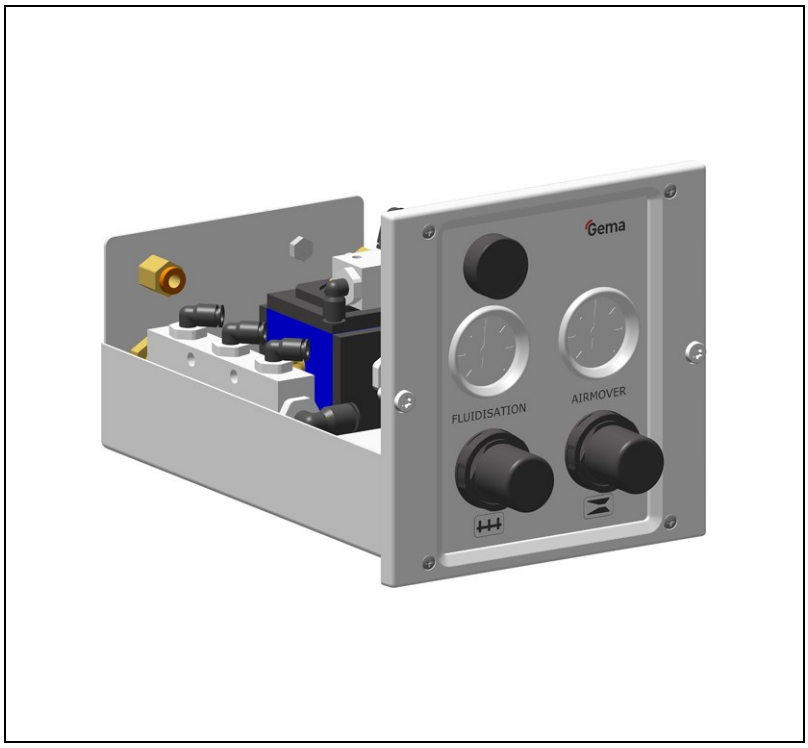

Translation of the original operating instructions

Gema

Documentation OptiAir CA12

For the latest information about Gema products, visit www.gemapowdercoating.com.

For patent information, see www.gemapowdercoating.com/patents or www.gemapowdercoating.us/patents.

Printed in Switzerland

Gema Switzerland GmbH
Mövenstrasse 17
9015 St.Gallen
Switzerland

Phone: +41-71-313 83 00
Fax.: +41-71-313 83 83

E-mail: info@gema.eu.com

Table of contents

About this instructions

General information

This operating manual contains all important information which you require for the working with the OptiAir CA12. It will safely guide you through the start-up process and give you references and tips for the optimal use of your new powder coating system.

Information about the functional mode of the individual system components should be referenced in the respective enclosed documents.

Keeping the Manual

Please keep this Manual ready for later use or if there should be any queries.

Safety symbols (pictograms)

The following warnings with their meanings can be found in the Gema operating instructions. The general safety precautions must also be followed as well as the regulations in the relevant operating instructions.

⚠ DANGER

Indicates a hazardous situation which, if not avoided, will result in death or serious injury.

⚠ WARNING

Indicates a hazardous situation which, if not avoided, could result in death or serious injury.

⚠ CAUTION

Indicates a hazardous situation which, if not avoided, could result in minor or moderate injury.

ATTENTION

Indicates a potentially harmful situation. If not avoided, the equipment or something in its surrounding may be damaged.

ENVIRONMENT

Indicates a potentially harmful situation which, if not avoided, may have harmful consequences for the environment.

▶ **Notice**

<Useful information, tips, etc.>

Presentation of the contents

Figure references in the text

Figure references are used as cross references in the descriptive text.

Example:

"The high voltage (**H**) created in the gun cascade is guided through the center electrode."

Safety

Intended use

- This product is built to the latest specification and conforms to the recognized technical safety regulations and is designed for the normal application of powder coating.
- Any other use is considered non-compliant. The manufacturer shall not be liable for damage resulting from such use; the user bears sole responsibility for such actions. If this product is to be used for other purposes or other substances outside of our guidelines then Gema Switzerland GmbH should be consulted.
- Observance of the operating, service and maintenance instructions specified by the manufacturer is also part of conformity of use. This product should only be used, maintained and started up by trained personnel, who are informed about and are familiar with the possible hazards involved.
- Start-up (i.e. the execution of intended operational tasks) is forbidden until it has been established that this product has been set up and wired according to the guidelines for machinery. The standard "Machine safety" must also be observed.
- Unauthorized modifications to the product exempt the manufacturer from any liability from resulting damage.
- The relevant accident prevention regulations, as well as other generally recognized safety regulations, occupational health and structural regulations are to be observed.
- Furthermore, the country-specific safety regulations also must be observed.

Product specific security regulations

- This product is a constituent part of the equipment and is therefore integrated in the system's safety concept.
- If it is to be used in a manner outside the scope of the safety concept, then corresponding measures must be taken.
- The installation work to be done by the customer must be carried out according to local regulations.

– It must be ensured, that all components are earthed according to the local regulations before start-up.

Notice

For further security information, see the more detailed Gema safety regulations!

⚠ WARNING

Working without operating instructions

Working without operating instructions or with individual pages from the operating instructions may result in damage to property and personal injury if relevant safety information is not observed.

– Before working with the device, organize the required documents and read the section "Safety regulations".
– Work should only be carried out in accordance with the instructions of the relevant documents.
– Always work with the complete original document.

Product description

Field of application

The Pneumatic-fluidizing unit distributes the compressed air to the gun control units and regulates the fluidizing air and Airmover pressure.

Reasonably foreseeable misuse

– Use with insufficient compressed air quality

– Input pressure too low

Technical data

Pneumatic data

OptiAir CA12	
Input pressure	7-10 bar / 101-145 psi
Compressed air consumption	dependent on the number of connected guns
Water vapor content	max. 1.3 g/m³
Oil content	max. 0.1 mg/m³
Protection type	IP54
Approvals	CE Ex II 3D

Dimensions

OptiAir CA12	
Width	173 mm
Height	177 mm
Depth	290 mm
Weight	2.2 kg (CA12-A) 2.8 kg (CA12-B)

Structure

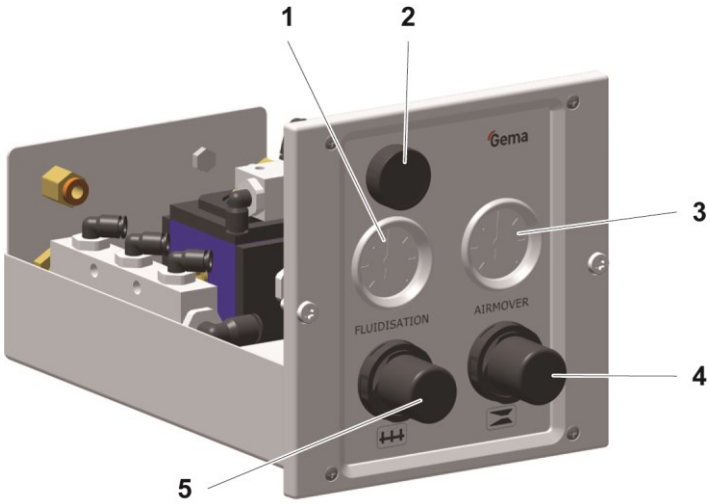

fig. 1: Structure

1 Pressure indicator for fluidizing air
2 Prefluidization press button
3 Pressure indicator for Airmover
4 Pressure regulator for Airmover
5 Pressure regulator for fluidizing air

Principle of operation

The prefluidization is switched on manually by pressing the **Prefluidization** key. The fluidization operates directly by connecting the Pneumatic-fluidizing unit to the compressed air.

The fluidizing air produces an overpressure in the powder hopper. This overpressure prevents the powder supply and must be eliminated. For this purpose an Airmover is installed on the powder hopper, which extracts, similarly as an injector, the overpressure and the powder mixed with air.

Therefore, the Airmover produces a depression in the powder hopper. The air volume, which can be extracted by the Airmover, depends on the powder hopper size and the fluidizing air volume.

Assembly / Connection

Connecting the Pneumatic-fluidizing unit

The Pneumatic-fluidizing unit is delivered ready-to-use by the manufacturer. Just a few hoses must be connected additionally.

NOTICE

The compressed air must be free of oil and water!

The Pneumatic-fluidizing unit is connected as follows:

1. Connect the fluidizing air hose to the output **3** and to the corresponding connection on the powder hopper
2. Connect the Airmover hose to the output **1** and to the Airmover
3. Connect the compressed air supply hose to the connection **2 (Air supply IN)**

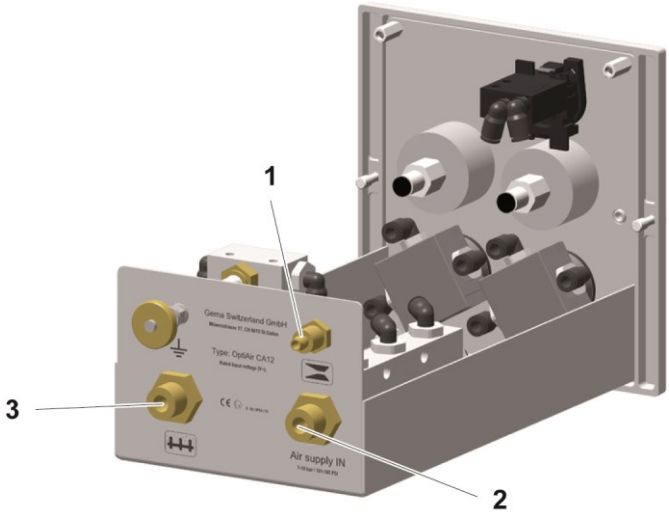

fig. 2: Connections

1	Output to the Airmover	3	Fluidizing air connection to the powder hopper
2	Compressed air main connection		

Setting the fluidization

The powder fluidization depends on the powder type, the air humidity and the ambient temperature.

The Pneumatic-fluidizing unit contains a push button for the prefluidization, as well as a pressure regulator and a pressure gauge for fluidizing air and Airmover.

Notice

The Pneumatic-fluidizing unit is connected to a 7-10 bar compressed air circuit.

The fluidization is set as follows:

1. Connect the main compressed air supply and open it.

   The compressed air flows now through the Pneumatic-fluidizing unit. The fluidization operates immediately when connecting the Pneumatic-fluidizing unit to the compressed air

2. Adjust the compressed air to 6 bar on the pressure reducing valve (**5**)

3. Check the powder fluidization in the powder hopper.

   If the powder does not "boil" regularly, push the prefluidization button (**2**) several times briefly. The compressed air of the prefluidization will "loosen up" the powder.

   If the powder begins to "boil", adjust the fluidizing air with the corresponding pressure regulator in such a way that the "boiling" spreads evenly on the powder surface.

   The fluidizing air pressure is monitored on the pressure gauge (**1**).

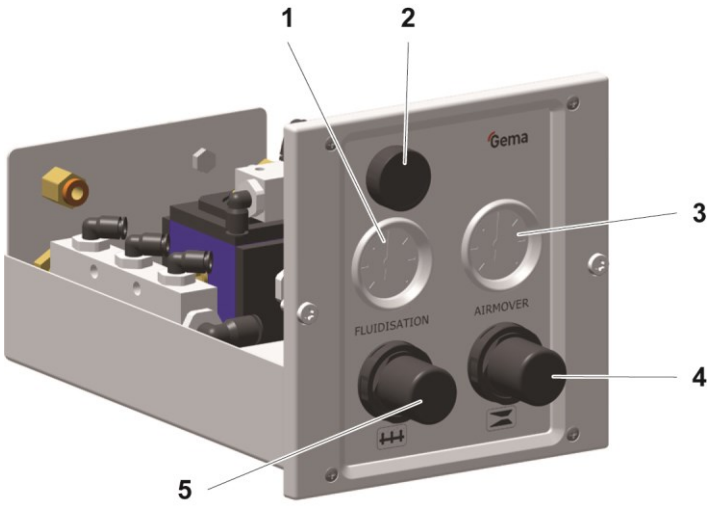

fig. 3:

Setting the Airmover air

The Airmover air is to be set, when a powder cloud rises over the powder surface and flows out through the powder hopper openings.

1. Set the Airmover air pressure on the pressure reducing valve (**4**) and monitor it on the pressure gauge (**3**).
2. Increase the pressure so far, until no more powder flows out of the powder hopper.

Notice

If these settings are once fixed, they can be left also when work interruptions take place. A reset of the adjusted values is thereby not necessary.

3. Switch on the OptiFlex A1 control system with the main switch
4. Set and/or operate the guns (see therefore the powder gun and gun control unit operating instructions)

Spare parts list

Ordering spare parts

When ordering spare parts for powder coating equipment, please indicate the following specifications:

– Type and serial number of your powder coating equipment

– Order number, quantity and description *of* each spare part

Example:

– **Type** OptiGun GA03 automatic powder gun

  Serial number 1234 5678

– **Order no.** 203 386, 1 piece, Clamp – Ø 18/15 mm

When ordering cable or hose material, the required length must also be given. The spare part numbers of this bulk stock is always marked with an *****.

Wearing parts are always marked with a **#**.

All dimensions of plastic hoses are specified with the external and internal diameter:

Example:

Ø 8/6 mm, 8 mm outside diameter (o/d) / 6 mm inside diameter (i/d)

ATTENTION

Use of non-original Gema spare parts

When using the spare parts from other manufacturers the explosion protection is no longer guaranteed. If any damage is caused by this use all guarantee claims become invalid!

– Only original Gema spare parts should be used!

OptiAir CA12-A (for use with HF50/HF100 powder hopper) – spare parts list

	OptiAir CA12-A Pneumatic-fluidizing unit – complete (without pos. 18)	1013 442
1	Elbow joint – 1/4", Ø 6 mm	265 691
2	Shuttle valve – 1/4"	259 217
5	Push button	1009 102
6	Connection sleeve – 1/4", Ø 6 mm	233 404
7	Pressure gauge – 0-6 bar, 1/8"	1003 300
8	Elbow joint – 1/8", Ø 6 mm	254 061
9	Pressure regulator – 0.1-4 bar, G1/4"	1009 101
10	Front frame – complete	1007 048
12	Adjusting elbow – Ø 6-4 mm	261 181
16	Adapter nipple – 3/8"-1/4"	202 550
17	Nut with kink protection for pos. 18 (not shown)	201 316
18	Plastic tube (Airmover air) – Ø 8/6 mm (not shown)	103 756*

Wearing part

* Please indicate length

OptiAir CA12-A (for use with HF50/HF100 powder hopper) – spare parts

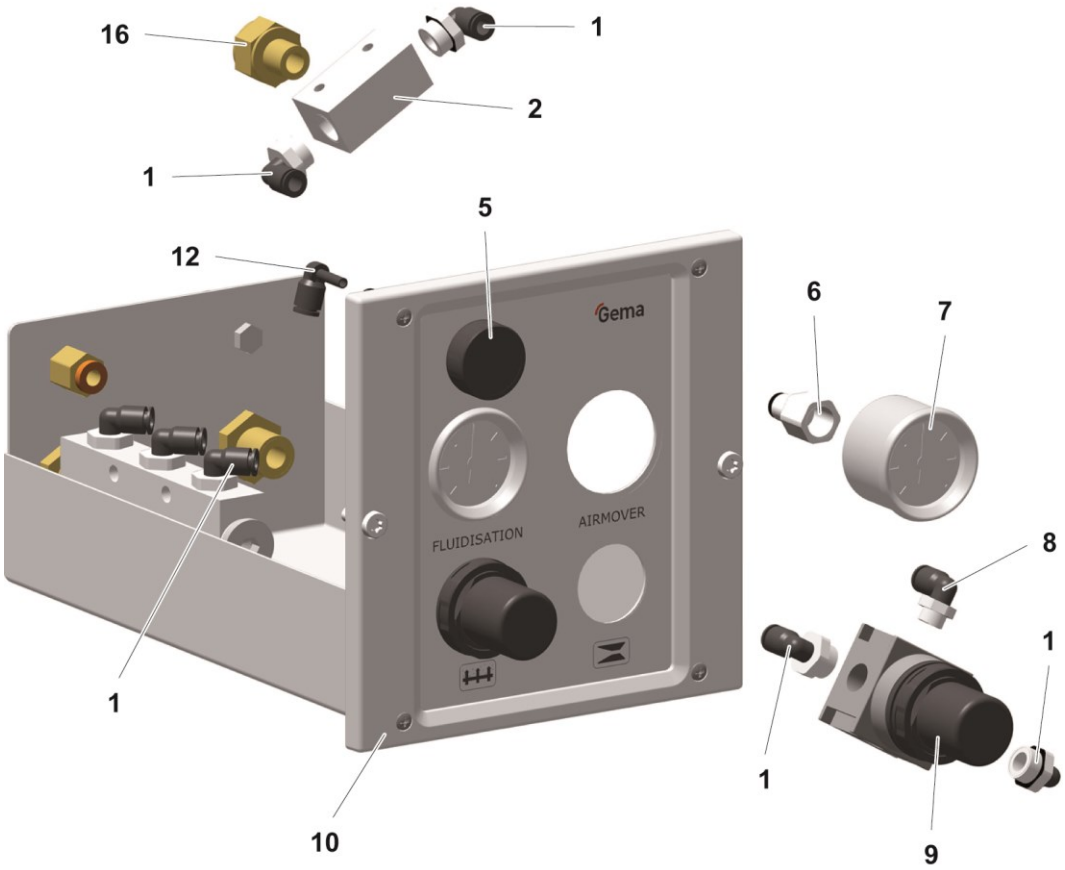

fig. 4:

OptiAir CA12-B (for use with HF150/HF200 powder hopper) – spare parts list

	OptiAir CA12-B Pneumatic-fluidizing unit – complete (without pos. 18)	1013 443
1	Elbow joint – 1/4", Ø 6 mm	265 691
2	Shuttle valve – 1/4"	259 217
3	Sealing plug – 1/8"	258 687
4	Screw-in nipple – 3/8", Ø 8 mm	259 659
5	Push button	1009 102
6	Connection sleeve – 1/4", Ø 6 mm	233 404
7	Pressure gauge – 0-6 bar, 1/8"	1003 300
8	Elbow joint – 1/8", Ø 6 mm	254 061
9	Pressure regulator – 0.1-4 bar, G1/4"	1009 101
10	Front frame – complete	1007 048
11	Elbow joint – 3/8", Ø 8 mm	240 010
12	Adjusting elbow – Ø 6-4 mm	261 181
13	Pressure regulator – 3/8", remote controlled	244 384
14	Elbow joint – 1/8"-1/8"	235 733
15	Adapter nipple – 1/8"-1/4"	202 606
17	Nut with kink protection for pos. 18 (not shown)	201 316
18	Plastic tube (Airmover air) – Ø 8/6 mm (not shown)	103 756*

Wearing part

* Please indicate length

OptiAir CA12-B (for use with HF150/HF200 powder hopper) – spare parts

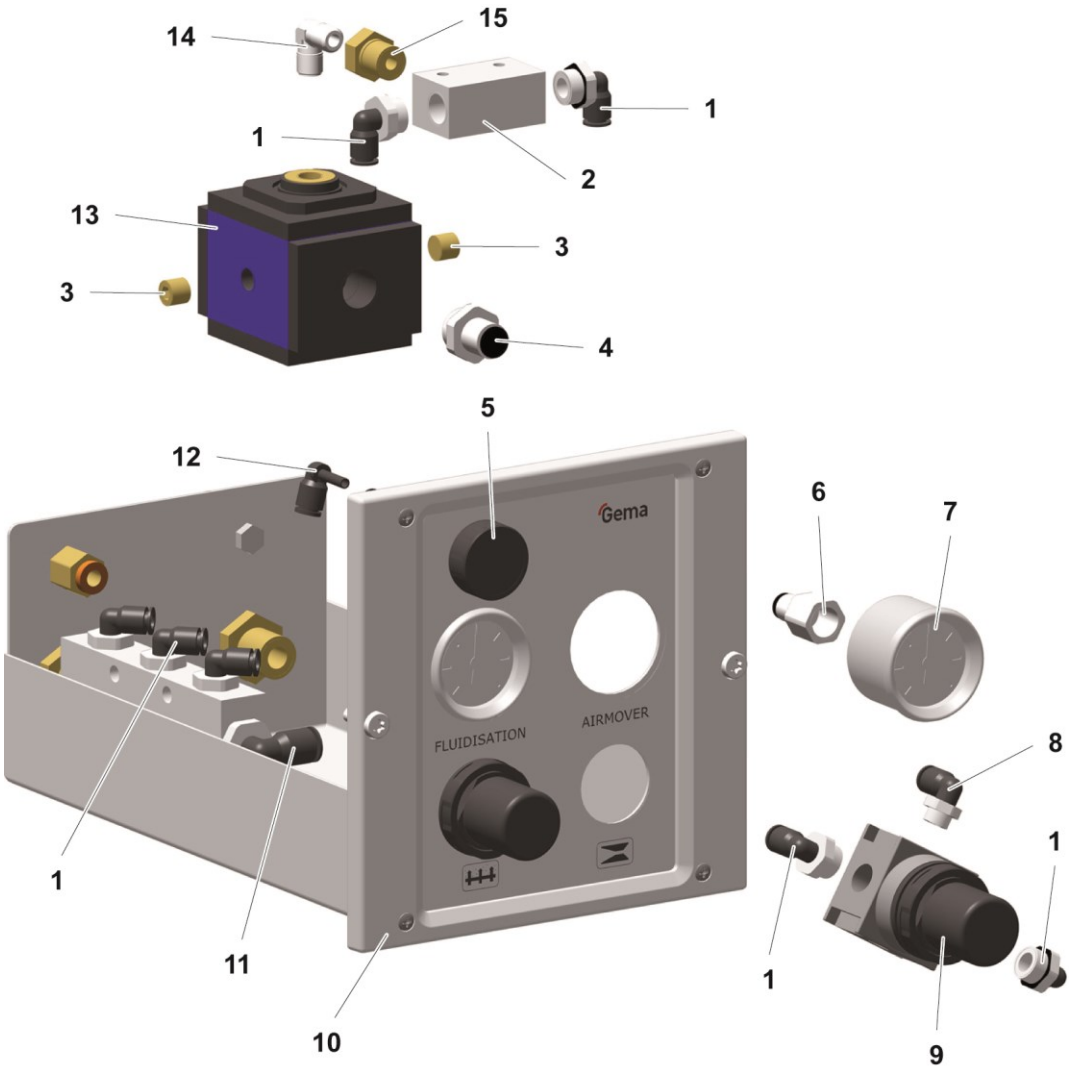

fig. 5:

Index