E

Operating Instructions

Powder Coating Booth with Filter Belt Recovery System MFR

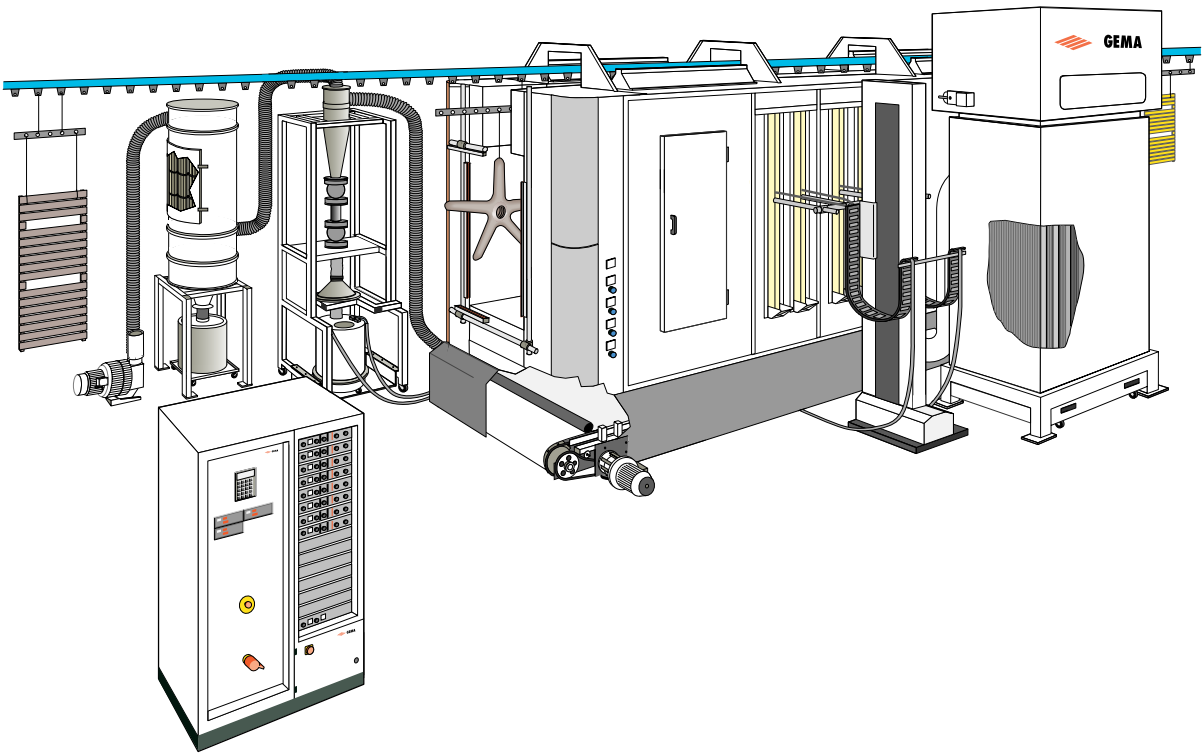

Issued 08/96

An ITW Company

Foreword

The GEMA MFR System is a compact powder coating booth for electrostatic powder coating for single, and multiple colour operation.

The MFR booth is based on the unique, patented GEMA Filter belt system with a gentle, downward directed, even air stream. The MFR system fulfils the highest requirements for recovery efficiency.

The MFR system fulfils two functions:

a) It provides a coating station which confines suspended powder particles to a restricted area in order to prevent the build-up of dangerous air/powder concentrations, which is especially important for plastics powders (dust explosion hazard), and thereby establishes a safe working environment.

b) It recovers oversprayed powder, i.e. powder which does not adhere to the workpieces is made available for subsequent work cycles, thus ensuring economic operation.

Prerequisites for safe operation of the plant

In the interest of work safety it is, therefore, essential that the operating principles of this system are well understood.
For thispurpose, please consult sections 1-7 before pressing the Start button. Also read further plant-specific instructions, e.g. the APS Series and all additional components.

The best way of gaining the necessary experience in operating the system is to initially follow the steps exactly as outlined in the operating instructions. They are also useful in case of malfunctions or uncertainties and can provide many answers and thus frequently makes it unnecessary to contact factory trained specialists.
For these reasons the operating instructions should always be kept at the machine. If you, nevertheless, should have difficulties, be experienced your local GEMA representative will gladly assist you. The contact address is found on the inside of the title page of the manual.

Deviation from the Operating Manual according to system composition

The MRF Powder Coating Booth is a complex system which is eassembled according to the specific requirements of the customer.
The composition of your plant (single or multiple colour operation) can deviate from that described in this manual. However, the overall funtioning of the whole system does not change only the positioning, and choice of the individual components of the plant.

Pressure monitoring

All rated values are computed or determined through laboratory tests. They have been booked by the manufacturing company. The actual values are measured and recorded during commissioning. They are used as control, and standard values during operation and after repairs or overhauls.

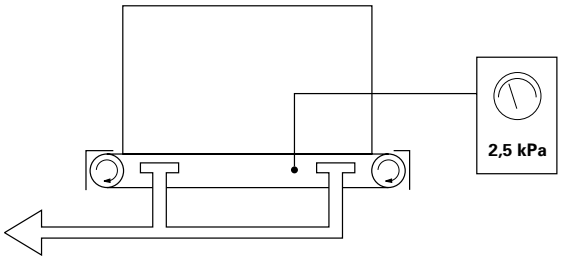

Vacuum trough

Rating:	kPa	
Actual:	kPa initial	
Actual:	kPa after	Hrs.

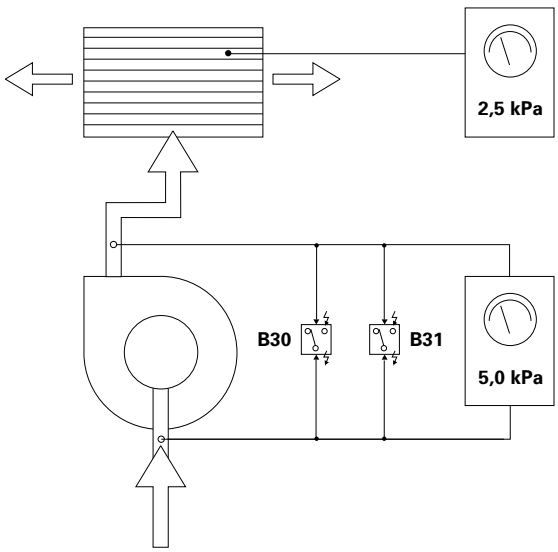

Positive pressure absolute filter

Actual: kPa initial

Differential pressure fan

Rating max.:	kPa
Rating min.:	kPa
Actual:	kPa initial

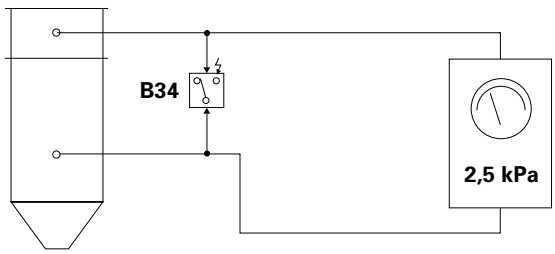

Differential pressure scavenging-air filter

Rating:	kPa	
Rating max.:	kPa	
Actual:	kPa	
Actual:	kPa after	Hrs.

Pressure monitoring: (cont.)

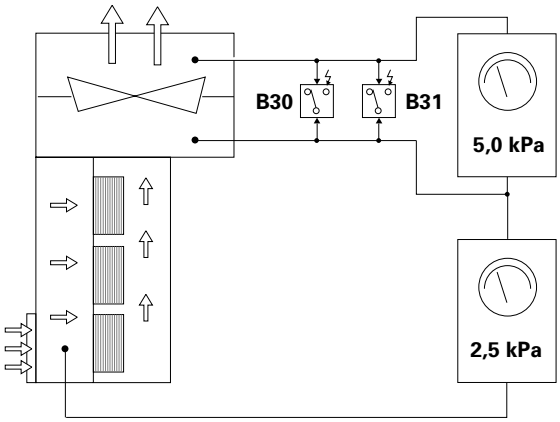

Compact Exhaust

Positive pressure fan

max: 1200 kPa

Differential pressure filter cells

max: kPa

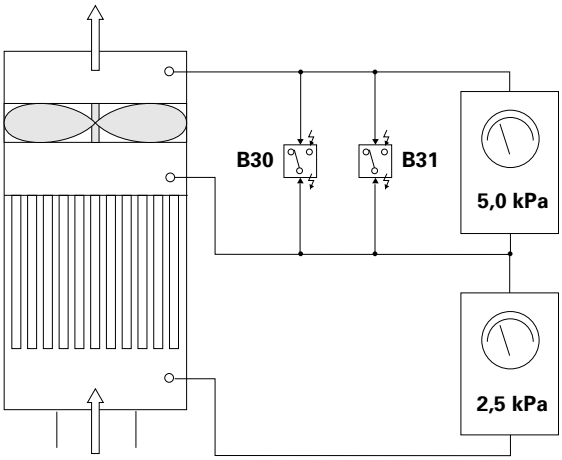

After Filter

Positive pressure fan

max: 5 kPa

Differential pressure

Rating max.: kPa
Rating min.: kPa
Actual: kPa initial

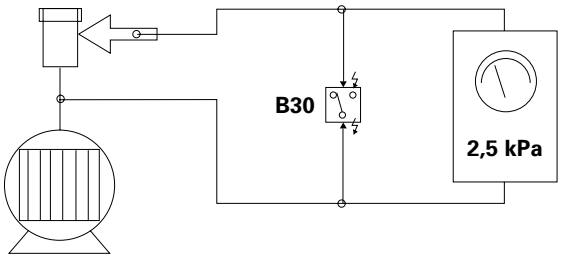

Positive pressure Protection Filter

Rating: kPa
Rating max.: kPa
Ist: kPa initial

1. Operation of the MFR System

1. Operation of the MFR System

The MFR system features two separate air circuits:
Exhaust air, and the pneumatic powder recovery.

1.1 Exhaust air from the booth

The ventilation (low pressure) in the booth (**1**) prevents powder from escaping through the booth openings and keeps the powder concentration within safe limits. Powder which does not adhere to the workpiece by coating operation is forced onto the filter belt (**2**) by the air stream in the booth (**1**). The air passes through the filter belt, and the powder particles, however, are trapped on the filter belt. The clean air is extracted from trough (**3**) by the exhaust fan (**4**) and returned via the xxxabsolutexxx filter (**5**) into the workshop (or via exhaust duct into the atmosphere). The filter belt (**2**) conveys the recovered powder continuously out of the booth, thus preventing hazardous accumulations of powder inside the booth.

1.2 MFR multiple colour system - Powder recovery system with Multicyclone

With a PS Powder Sieve:
Recovered powder is sucked off the filter belt (**2**) by the suction tube (**7**). which extends the full width of the belt, and is conveyed to the cyclone (**9**) where it is separated from the conveying air. The discharge unit (**10** - pinch valve, prevents secondary air from exhausting to the atmosphere) conveys the powder to the PS Powder Sieve (**11**) and then to the powder hopper (**12**) of the powder coating equipment. Conveying air , still containing a slight amount of powder is fed to the rinsing air filter (**13**) and then through the exhaust fan (**14**) into the workshop via the side channel (or through an exhaust duct to the outside atmosphere.

With a Sieve machine:
A powder sieve can also be used in exceptional circumstances where a high quality requirement is placed on the recovered powder. The powder recovery circuit remains the same as for the PS Powder Sieve.

1.2.1 MFR single colour system: Powder recovery unit with a Rinsing air Filter

Recovered powder is sucked off the filter belt (**2**) by the suction tube (**7**). which extends the full width of the belt, is fed to the Rinsing air filter (**16**) The discharge unit (**10**) transports the powder separated from the conveying air to the PS Powder Sieve (**11**) and largely prevents the intake of secondary air through the powder outlet of the filter separator. The sifted powder subsequently drops into the powder hopper (**12**) of the powder coating unit. The exhaust air, still containing a small amount of powder, is fed through the protective filter (**17**) and then enters the blower (**14**) as clean air.

Issued 08/96

Key:

1. Booth
2. Filter belt
3. Low pressure trough
4. Exhaust fan
5. After filter
7. Suction tube
8. Minizyklon
10. Pinch valve
11. PS Powder Sieve
12. Powder hopper
13. Filter separator as End filter
14. Recovery fan
15. Waste powder hopper
16. Filter separator as main filter
17. Protective filter

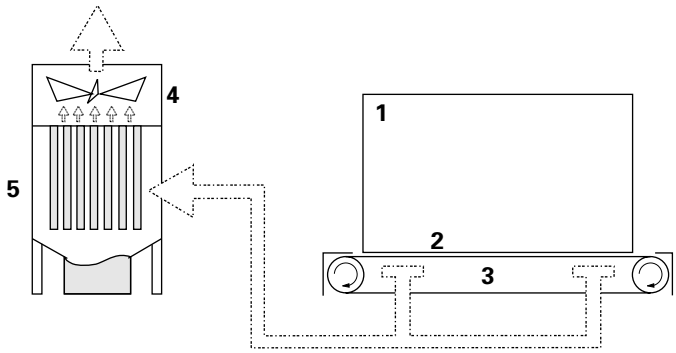

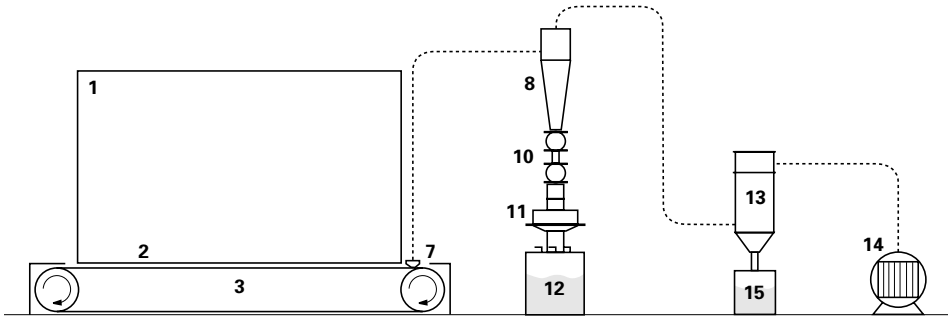

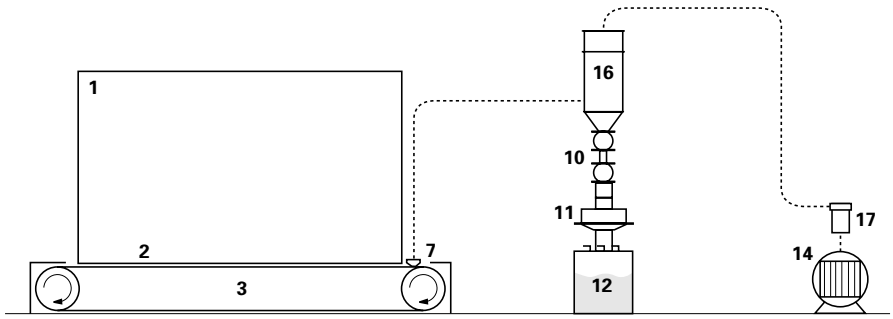

1.4 Component parts of the booth

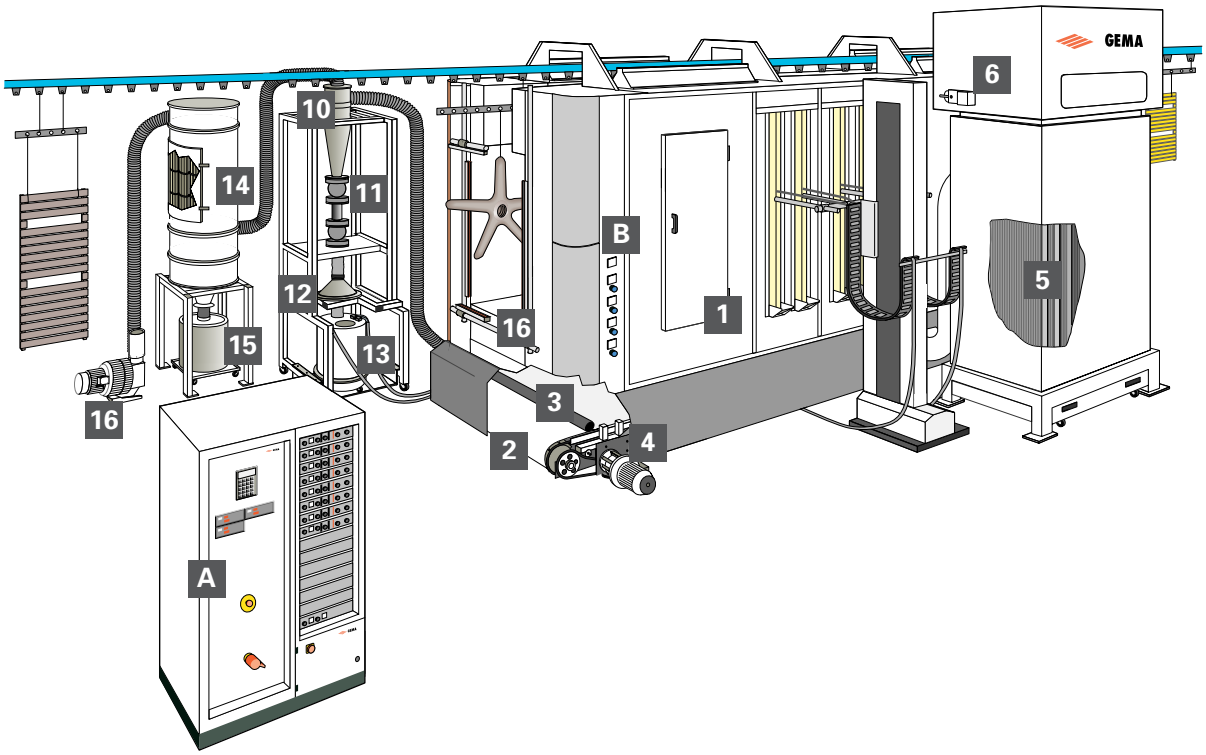

Key:

1. Booth
2. Filter belt
3. Suction tube
4. Drive unit
5. After Filter
6. Vane adjusting motor
10. Minizyklon
11. Pinch valve
12. PS Powder Sieve
13. Powder hopper
14. Filter separator
15. Waste powder hopper
16. Exhaust fan

A Control unit
B Main Pneumatic control unit

2. Exhaust system

2.1 Regulation and adjustment

To prevent the powder from escaping from the booth during coating the exhaust air system creats low pressure in the booth. Air flows from the outside of the booth to the inside of the booth. The value of the air intake velocity for your plant is determined by GEMA and is indicated on the corresponding measuring instruments. The nomimal value of the exhaust air is dependent on the powder/air concentration, as well as the total area of the booth openings. The active filter area, and from that the booth size are derived from the nominal exhaust air value and the maximum fb loading.

The fan (**5**) produces this nomimal exhaust air with a Δ P (pressure difference) of approximately 340-360 mm WS (pressure gauge). Low pressure is in the trough (**2**) threreby. This is indicated on the pressure gauge (**1**). The air containing powder is sucked through the filter band. Powder remains on the filter band and the air flows through the exhaust channel to the After Filter (**4**) and via the fan (**5**) back into the workshop.
The nomimal exhaust air is monitored electrically and an alarm is given when there is too much or too little exhaust air. The alarm can be acknowledged by resetting the exhaust vanes (**3**). The required amount of exhaust air must be adjusted with the exhaust vanes (**3**) depending on the degree of contamination of the filter band and After Filter.

	New condition	**In operation**
Resistance from the filter band	20 mm WC	60 mm WC
Resistance of the Exhaust channel and After Filter	110 -130 mm WC	210 - 230 mm WC
Throttle vanes	**210 mm WC**	**50 - 70 mm WC**
Total Pressure difference	340-360 mm WC	340-360 mm WC

Automatic Throttle Vane adjustment

The optimum nominal air is adjusted automatically with an automatic vane regulator (**3**) on MFR Powder Coating Booths with standard control units, with PLC controls, and operating terminal.
When the filter band is too contaminated and the required amount of exhaust air cannot be regulated, then an alarm is given. The filter band must then be thoroughly cleaned or replaced.
The pressure gauge (**6**), and the Manostats „**low**“ and „**high**“ monitor the loading of the filter band and the minimum air intake speed. When fault occurs an alarm is given.

Manual regulation of the Throttle vane

The throttle vanes can be adjusted manually. See Point „2.2 Manual adjustment of exhaust air“ on page 3 in this section.

ATTENTION! Ignoring an alarm will lead to overloading of the filter band which will become blocked, and damaged.

2.1 Principle of Exhaust air with integrated After Filter Unit

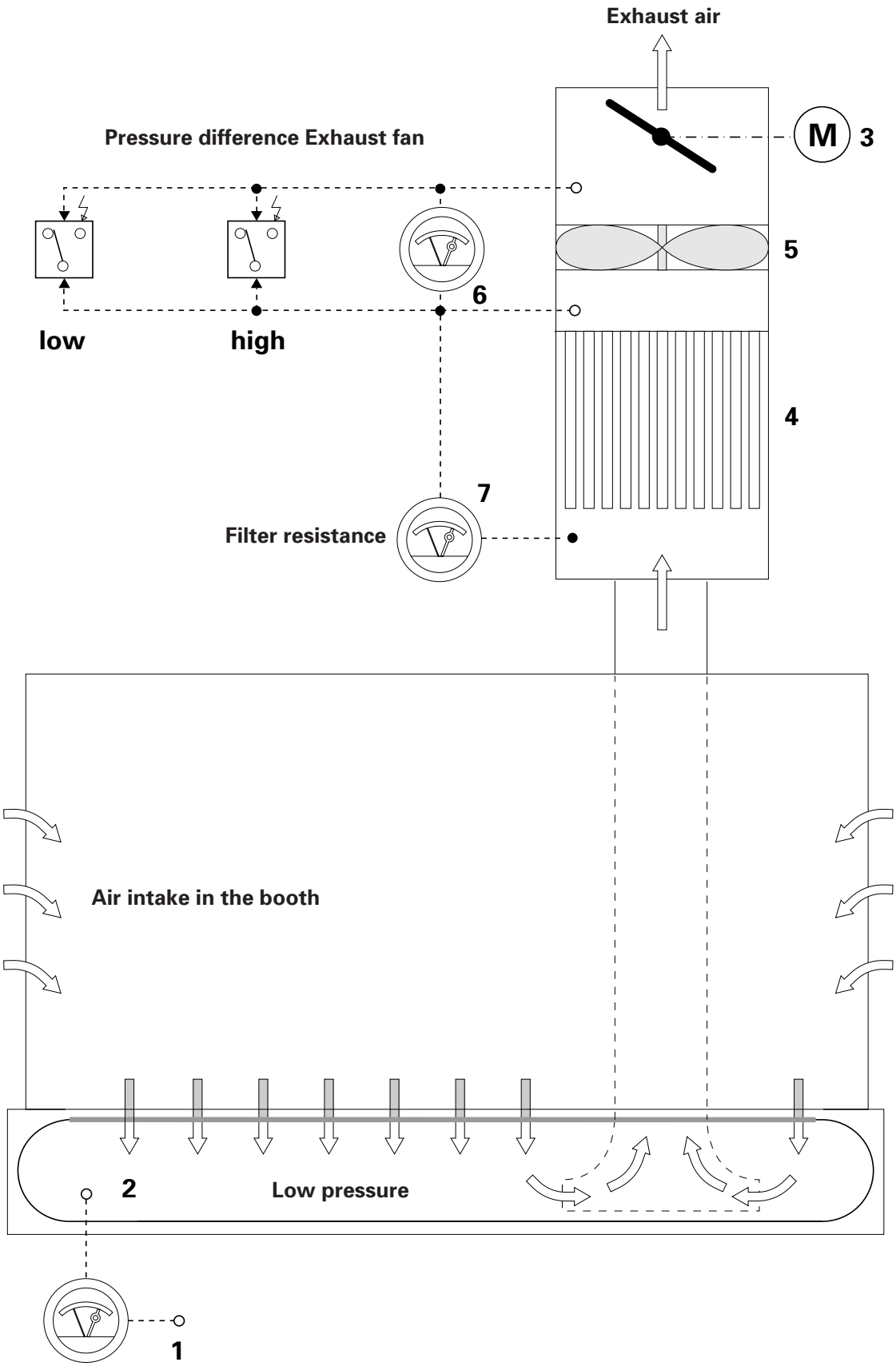

2.2 Manual readjustment of the exhaust air volume.

The exhaust air volume must be readjusted:

- whenever the filter belt is replaced or cleaned. The pressure usually drops below the permissible value, which means that the exhaust air volume is excessive, and the load on the filter belt too high. The filter band can be clogged or powder can be sucked through the filter band and overload the After Filter.
- if the air intake speed drops below the minimum value. This is the case if the filter belt becomes clogged. The increased air resistance causes the low pressure in the exhaust air system to rise and the exhaust air volume, as well as the air intake speed to sink in the booth. Powder can escape from the booth openings.

Manually adjust the throttle vanes

ATTENTION	**Before each readjustment of the exhaust air the filter band must be thoroughly cleaned.**

Only in this way can the correct readjustment of the exhaust air volume with the throttle vanes be guaranteed.

1. Select Booth cleaning
2. Select „filter band deep cleaning“ and clean the filter band thoroughly for approximately 1 hour. If there is not enough time available it is always better to clean for a shorter time (10 minutes) than not to clean at all.
3. Switch guns off
   Switch to normal coating operation.
   The throttle vanes can now be adjusted without coating.
4. Open or close the throttle vane as wide that the needle moves between the set markings on the pressure gauge.
5. Switch the guns on and continue coating.

   Small corrections can be made with the throttle vanes during operation when the exhaust air volume changes while coating is taking place.
6. Corrections to the exhaust air volume must be made over a longer operating period, if necessary. Thereby, the low pressure rises or sinks, at the fan, and the exhaust air volume, or respectively, the air intake speed sinks or rises until the correct exhaust air volume has swung in between the marks.

ATTENTION	**Periodic thorough cleaning increases the powder recovery efficiency of the booth, and increases the life of the filter band.**

If the prescribed value is not achieved, in spite of thorough cleaning and readjustment, then the filter band is clogged and must be replaced

Issued 08/96

2.3 After Filter - Function

The exhaust air fan in the After Filter sucks the exhaust air from the low pressure trough under the Filter belt into the After filter. In the filter exhaust air, still containing a small quantity of powder, is separated from the powder through the sinter lamellen filter plates (**9**) and the clean air is exhausted into the workshop.
The suction fan of the exhaust air is system mounted in the fan housing (**7**). The fan housing is fitted with silencer pads.

The suction efficiency of the fan is dependent on the total area of the booth openings, the effective filter belt area, and the permissible powder/air concentration.
The required volume of air is regulated by built-in throttle vanes (**8**).

The perfomance of the exhaust air system is dependent on the degree of clogging of the filter belt, and the filter plates (**9**). For this reason the suction perfomance is measured by the pressure difference between the suction chamber, and the exhaust side and indicated at the pressure monitoring (**10**).

An rise in pressure indicates increasing clogging of the filter plates.

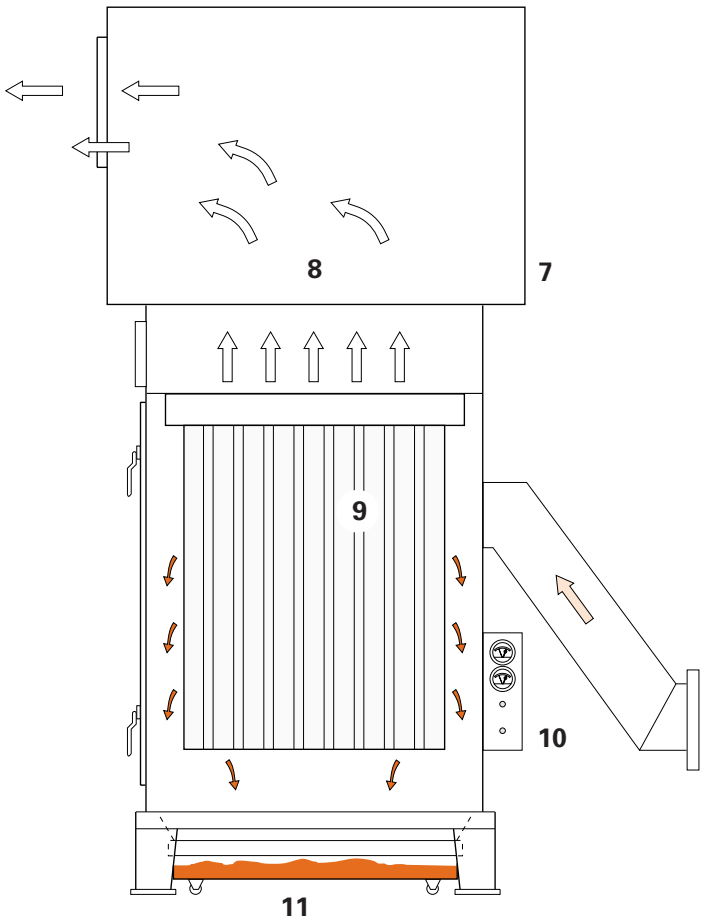

Issued 08/96

2.4 After Filter Maintenance

The after filter with sinter lamella needs practically no maintenance. However, it is recommended to make short, regular checks during long operating times in order to guarantee optimum powder filtering.

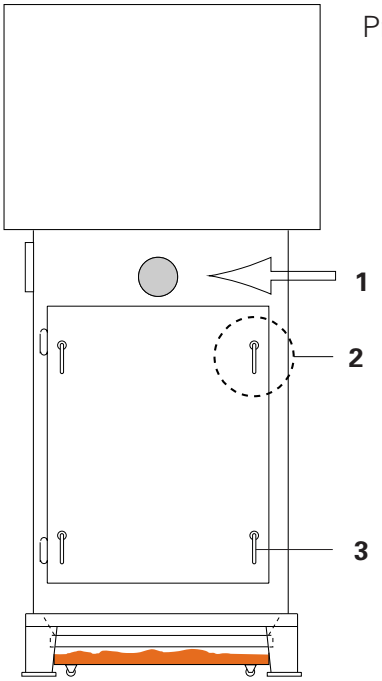

Proceedure:

1. Switch the plant off completely.

2. Check the clean air chamber in the after filter through the observation hole (**1**) above the door of the filter housing, when thwere is a layre of powder is present this indicates that filter plates are defect. See next page for replacing filter plates.

3. Clean measuring point:
   To do this the door of the filter chamber must be opened (Turn locking lever - **3**). The measuring point (**2**) for air pressure measurement is always built into the filter chamber of th after filter on the right-hand side at the top behind the door frame.

   Clean the white fluidizing pad at the measuring point (**2**) or unscrew it and blow it out with compressed air from the inside. This measuring point must be checked regularly and when it is contaminated it must be cleaned, otherwise the results of the measurements could be falsely influenced.

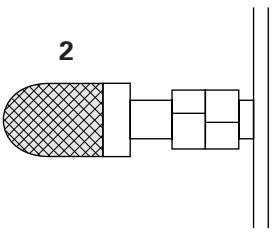

4. Blow the measuring system through:
   Detach the connections on the pressure gauge as well as the measuring point and blow clean, water, and oil-free compressed air through the system.

   Repeat at intervals of six months

3. Powder Recovery Equipment

The basic difference between the GEMA Powder Recovery Equipment is :

- **Multiple colour recovery**
- **Single colour recovery**

With single colour recovery, and multiple colour recovery the same filter components are largely the same, only in a different lay-out
Setting the powder recovery components is therefore nearly the same for single colour, as for multiple colour powder recovery

First, read Section 1 - Operation of the MFR System.

Multiple colour system

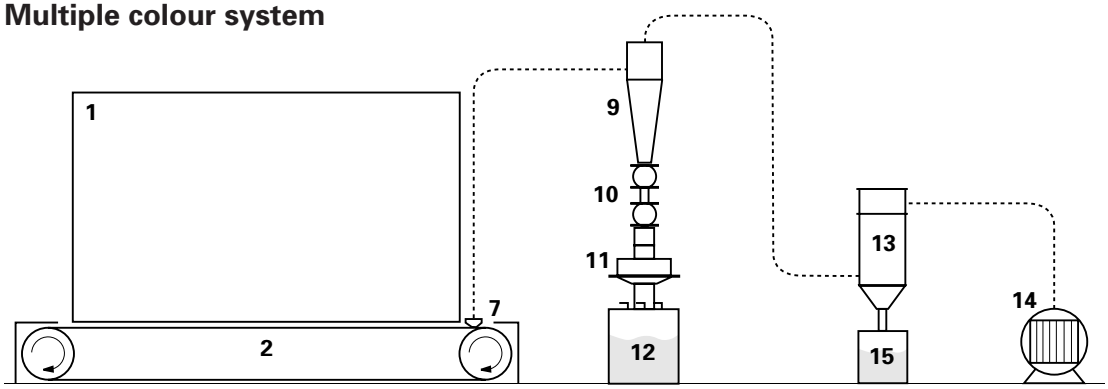

Single colour system

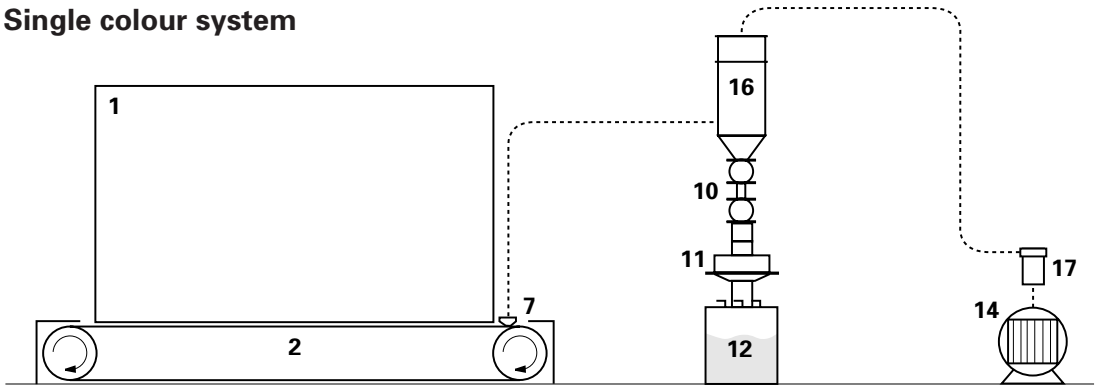

Key:

1. Booth
2. Filter belt
3. Low pressure trough
4. Exhaust air fan
5. After filter
7. Suction tube
8. Cyclone
10. Pinch valve
11. PS Powder Sieve
12. Powder Hopper
13. Rinsing air filter as End filter
14. Powder recovery fan
15. Waste powder hopper
16. Rinsing air filter
17. Protective filter

Issued 08/96

3.1 Suction tube

The powder which collects on the filter belt is sucked up by the suction tube and fed back to the powder recovery system. The suction tube is a cylindrical plastic tube, with suction slots on the underside just above the filter belt, which cover the width of the filter belt. The tube supports, and suction tube are made of a special antistatic plastic which neutralizes any electrostatic charge directly at the suction slots.

Fitting / dismantling the Suction tube :
In order to remove the suction tube the filter belt cover must be removed first.
Both retaining pins (3) can now simply be pulled out upwards and the suction tube can be removed.
Assembly of the suction tube is in the reverse order.

Setting the height of the suction tube :
In order to achieve the optimum powder recovery efficiency the suction tube must be set accurately.
To do this the Allen screws (**4**) on the inside of the suction tube holder must be carefully released with suitable Allen key. The suction tube can now be easily moved up or down in the guide slot.
From experience, a distance of 3-5 mm between the suction tube and the filter belt is recommended with the booth switched off. When the filter belt is stationary is must never touch the suction tube. As soon as the booth, and with it the powder recovery system, is switched on the filter belt is sucked up by the suction tube slots. Allow the filter belt to rotate a couple of times to see if the filter belt is continuously sucked onto the suction tube slots. Also observe that the filter belt does not fall down when the Velcro strip passes over the suction tube slots.

Maintenance :
Clean the suction tube slots daily with a cloth and compressed air. If necessary, blow the hose through with compressed air and clean with a spiral brush.

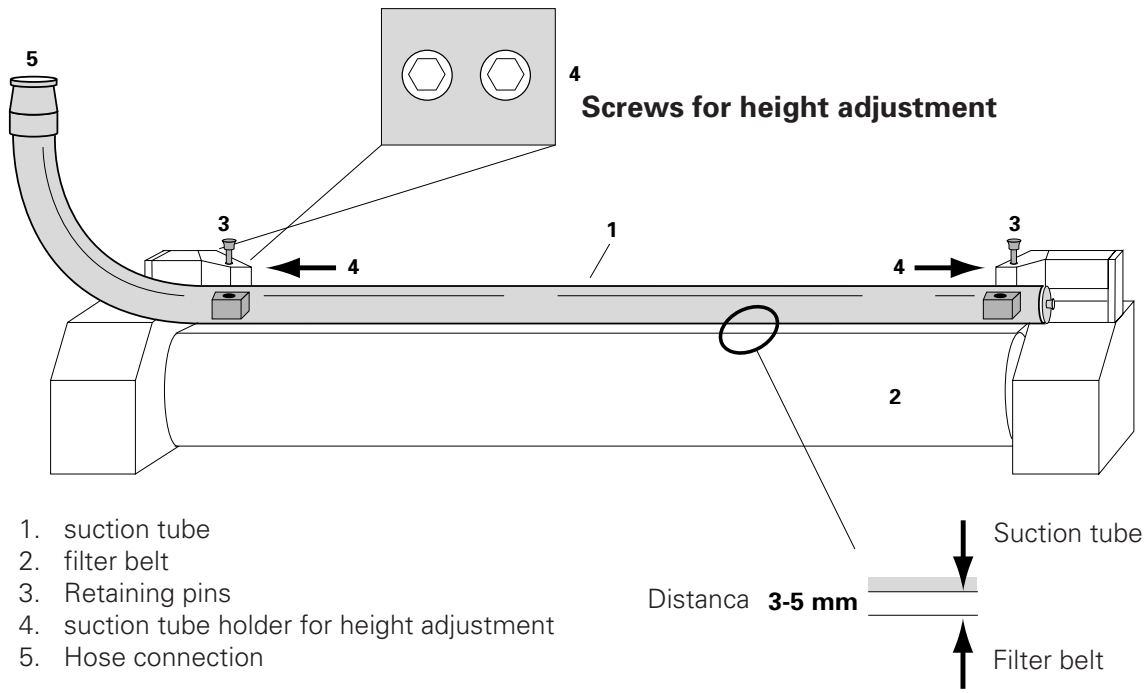

1. suction tube
2. filter belt
3. Retaining pins
4. suction tube holder for height adjustment
5. Hose connection

3.2 Scavenging air filter

The scavenging air filter is used for single colour or multiple colour systems.
In the single colour system scavenging air filter is used as the separating filter, instead of the cyclone.
In multiple colour systems the scavenging air filter is placed after the cyclone and used as the end filter or cleaning filter in the powder recovery circuit. The smallest powder particles in the air are retained here which were not separated in the cyclone.

A additional filter function is achieved in the scavenging air filter by the build up of a fine layer of coating powder (powder cake) on the Filters. This filter function must be carefully built up on the initial start up of the booth. Only when this additional filter function is correctly built up can the full filter function and a long operating life of the filter material be achieved. See 3.2.1 Filter Run in. page 3).
So that the air permeability and, thereby, the filtration ability are maintained, a part of the filter cake must be cleaned off at regular intervals.
This takes place automatically at preset intervals.

Function

Through feed line (**7**) the powder-air mixture enters chamber (**5**) where the powder is separated from the air. The powder drops through outlet (**6**) into the discharge unit or waste container. As the air penetrates the porous material of the filter cartridges (**4**) and reaches the top section (**2**) of the scavenging-air filter, the residual powder and contaminants are trapped by the filtration medium of the cartridges (**4**). The filtered air flows through exhaust line (**3**) to the blower. To prevent the filter cartridges from becoming clogged, they are periodically cleaned from the inside by short, strong blasts of air. These cleaning cycles are initiated by a small electronic circuit (**1**) on the pneumatic unit.

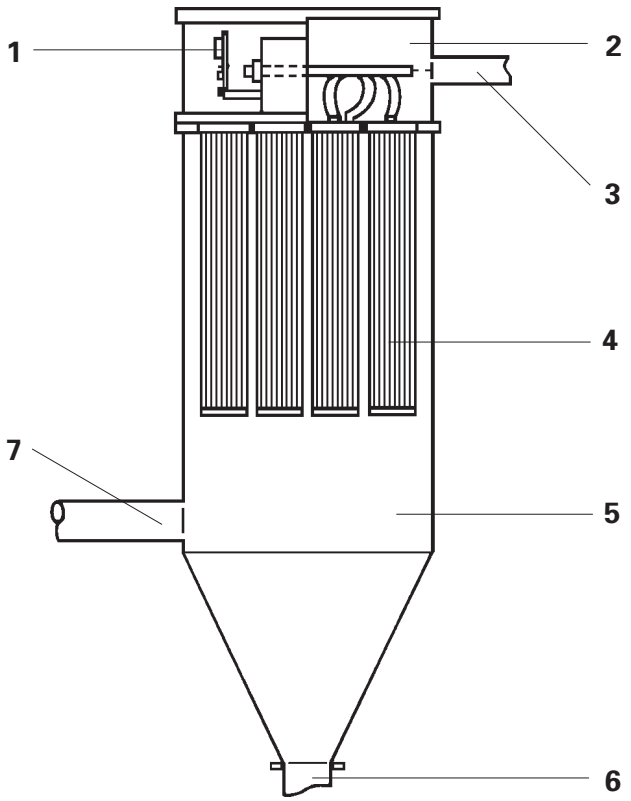

3.2.1 Scavenging air filter: Adjusting the Cleaning cycle

Manometer A223 monitors the suction performance, and the functioning of the scavenging air filter (9). If the pressure rises above the permissible level, the air volume and consequently the air speed and the suction power drop. Der Manostat B34 löst dann das Alarmsignal aus.

In the single-colour system, manometer xxx monitors the functioning of the scavenging air filter. If a filter element should become defective, the separated powder is retained by safety filter (**17**) and the differential pressure rises suddenly. The manostat shuts the safety filter (**13**) and the differential pressure rises suddenly. The corresponding manostat shuts the equipment off as soon as the maximum differential pressure is reached. Maintenance of the scavenging air filter 3.2.2. see page 6.

Multiple colour system

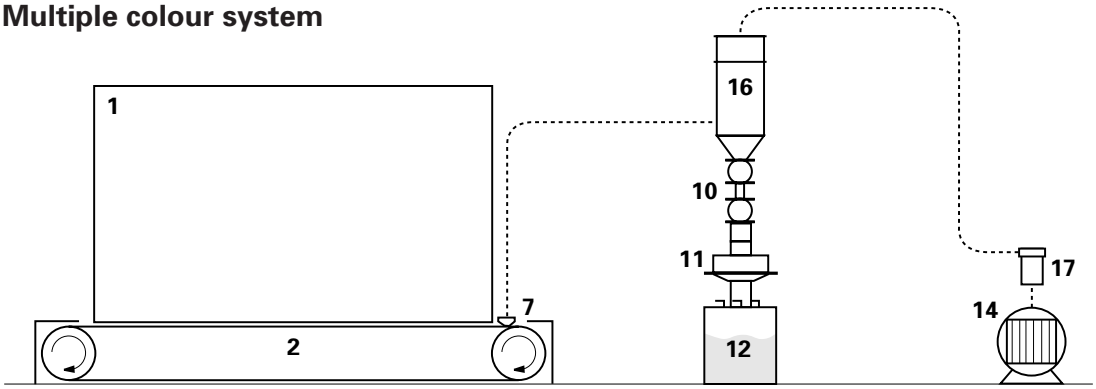

Single colour system

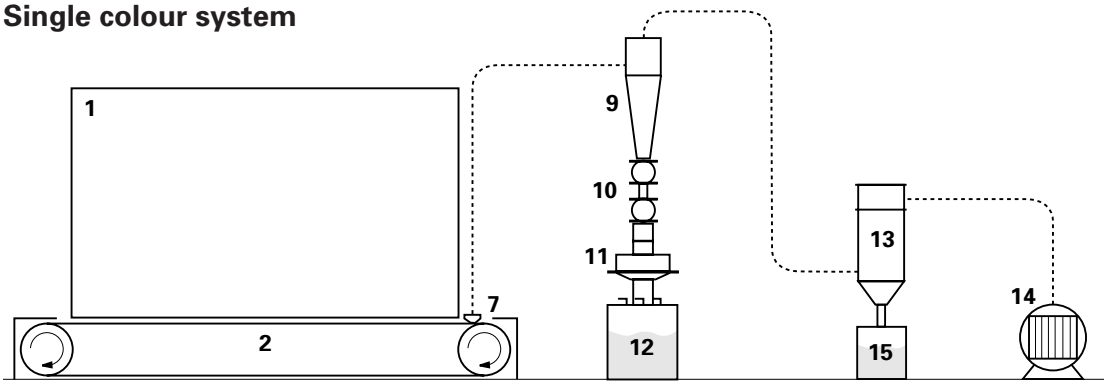

Key:

1. Booth
2. Filter belt
3. Low pressure trough
4. Exhaust air fan
5. After filter
7. Suction tube
9. Cyclone
10. Pinch valve
11. PS Powder Sieve
12. Powder Hopper
13. Rinsing air filter as End filter
14. Powder recovery fan
15. Waste powder hopper
16. Rinsing air filter
17. Protective filter

Issued 08/96

3.2.1 Scavenging air filter: Adjusting the Cleaning cycle

Running-in the filter cartridges:

Optimum filtration capability is achieved, after the build up of a fine layer of coating powder (filter cake) on the filters. This addition filter layer must be carefully built up after the initial start up.

When new filter cartridges are used they must be run-in first.

ATTENTION	**All filter cartridges must be replaced together. When only one filter cartridge is replaced it will quickly become clogged and, therefore, be useless.**

Procedure:

1. Check that all new filter cartridges, including seals, are fitted correctly.
2. Run the filter in slowly, until the pressure difference reaches 80 mm WC (Water Column)
3. At 80 mm WC cleaning is done with a maximum of 2.5 bar
4. Continue filtering until the pressure difference reaches 100 mm WC
5. At 100 mm WC cleaning is done a second time with 6 bar
6. The filter cake has been established.
   The pressure difference must be stabilize between 90-110 mm WC

   When the pressure does not stabilize, a higher or lower pressure is indicated, then go directly to Point 5 .
7. What happens when the filter is clogged?
   (Star filter looks clean, but just the same no air permeation)

   Remove the star filter and clean with compressed air or when necessary replace with a new star filter.

3.2.1 Increasing the pause interval of the valve

The pause intervals of the valve must be changed under the following circumstances:

1. when the folds of the star filter are damaged
2. when clogging takes place within hours and the pressure difference is too high

Procedure :

1. The pause interval of the valve can be input in the booth operation mode - Booth times (Booth time 10)

For the input of all booth times study Point 4 „ Operation of the MFR Powder Coating Equipment“ - 4.5 Booth times

The recommended values for time setting of the scavenging air filter can be taken from the table below.

Table for the setting time of the scavenging air filter

Powder Recovery system	Pause interval	Pulse time	No of Valves
compact exhaust system Plates after filter	5 min.	50 ms	8*
Scavenger air filter Single colour system	20-30 s	50 - 80 ms	3*
Scavenger air filter Multiple colour system	20-30 s	50 - 80 ms	3*

Instead of increasing the pause intervals of the valves the compressed air to the filter cartridges can also be reduced slightly.

Pause intervals for scavenging air filters in multiple colour system

Through the use of the cyclone, the separation coefficient of which lies over 90 %, the powder loading of the filter cartridges is too small, so that an adjustment the Jet-cleaning cycle is not necessary. The pause interval is set, therefore, to approximately 5 minutes, see Settings for a single colour system. If the pressure difference in the scavenging air filter reaches a maximum value of 160 mm WC during coating , just the same, then the pause interval is to be reduced. See also 3.2.1 Scavenging air filter: Adjusting the Jet-cleaning cycle.

mains connection
230 V, 40-60 Hz on backside to
solder to 115 VAC
115 VAC
60 Hz,
10 W
secured with safety mechanism F
200 mA/250 V, 5 x 20 mm

S7/2 test / automatic cleaning

S8 test cleaning
↑ next valve
↓ cleaning

S6 timescale factor for S2 and S3
1 ON = x 0,5; 2 ON = x 1; 3 ON = x 2

S2 and S3 added

S3 pause (1 min stroke)

S1 number of valves

S2 pause (6 s stroke)

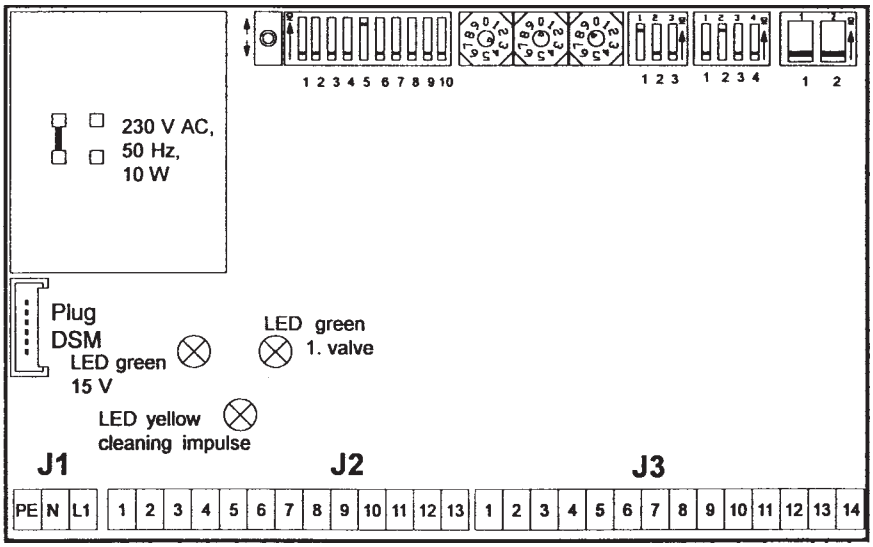

1 - 10 minus (–) connections for valve 1-10
11 plus (+) connection for all valves

3.2.1 Manual extending the pause intervals of the valves

With an MFR Booth, without a PLC Control the pause intervals must be set directly on the printed circuit board built into the scavenging air filter.

For these settings a fine screwdriver, and a stop watch or watch with sweep second-hand are required.

Procedure:

1. Remove the cover from the filter head. Do not damage the rubber seals.

2. Set slide switch S7/2 to „ON“

3. Switch on the MFR and APS equipment

4. Set the maximum powder output on the PGC Powder Gun Control

5. Spray powder, but without actual coating

6. Observe the rise in the differential pressure at the Manostat

7. Measure the time for the needle to rise from 80 to 120 mm WC

8. Switch off the equipment

9. Return the slide switch S7/2 to „OFF“

10. Divide the measured time by the number of valves
    Example:
    90 s : 3 valves = 30 s (pause time)

12. Set the pause time on the switches S2 and S3

S2 = seconds	S3 = minutes
0 = 6 s	0 = 0 min
1 = 12 s	1 = 1 min
2 = 18 s	: :
: :	
1 = 12 s	

13. Clean filter manually

14. Depress „Filter cleaning ON“ on the control cabinet and check or correct the time interval

15. Press „Equipment OFF“ and replace the cover

3.2.2 Maintaining the scavenging air filter

1. Select operating mode - Cleaning

2. Select „F3“ for Scavenging air filter cleaning
   The scavenging air filter is automatically cleaned.

3. When the scavenging air filter is clean, then the operating mode - Cleaning can be left again by pressing „F5“

   Replacing the filter cartridges:

4. Switch off the plant. The booth lights must not be illuminated.

5. Switch off the scavenging air filter and open

6. Unscrew filter cartridges by hand. Only hold the cartridge by the black rubber flange

7. Cleaning rubber seals of housing

8. Pull supporting sleeve out of cartridge

9. Slide the new cartridge over the supporting sleeve and press the base of the sleeve tightly into the sealing groove

10. Clean the inside of the filter (with a scraper, compressed air, and a soft cloth)

ATTENTION All filter cartridges must be replaced. When only one cartridge is replaced this will become damaged immediately due to low filter resistance.

11. Screw in a filter cartridge
    Ensure correct seating

12. Run the new filter cartridges in
    See next page

13. Press „F5“ and continue coating

3.2.2 Fitting and running in new filter cartridges

After fitting the filter cartridge the following is to be observed:

- The filter cartridge is seated properly
- The rubber flanges must be seated properly
- The starting torque must not be too great or the filter cartridge will be damaged
- The maximum jet-cleaning pressure must not be more than 6 bar

Running in the filter cartridges

The filtering capability is achieved, first, through the build up of an additional filter coating (filter cake) of powder. This filter layer is carefully built up after the initial start up, so new filter cartridges must be run in to start with:

1. All new filter cartridges including the seals, must be checked for satisfactory assembly
2. Run the filter in slowly, until the pressure difference reaches 80 mm WC (Water Column).
   At 80 mm WC cleaning is done with a maximum of 2.5 bar
3. Continue filtering until the pressure difference reaches 100 mm WC
   At 100 mm WC cleaning is done a second time with 6 bar
4. The filter cake has been established.
   The pressure difference should stabilize between 90-110 mm WC

When the pressure does not stabilize, a higher or lower pressure is indicated, then go to Point 5.

5. What happens when the filter is clogged?
   (Star filter looks clean, but just the same there is no air permeation).

   - Remove the star filter and clean with compressed air or when necessary replace with a new star filter.

   - Increase the pause interval of the valves
6. ... when the star filter folds are clogged?
   ... when clogging takes place within hours and the pressure difference is too high?

   - Increase the pause interval of the valves

   - Reduce the volume of air

Cleaning the filter cartridges:

Dismantle the Filter cartridges and blow out from the inside with compressed air (Distance of the gun from the filter cartridges = approximately 50 cm)

Do not hit, vacuum or brush the filter cartridges

All filter cartridges must be cleaned evenly. When restating the booth the function „Running in the filter cartridges“ must be repeated so that the filter cake can be built up.

3.2.2 Maintenance of the Scavenging Air Filter - Replacing the membrane:

1. Switch off the booth completely. The booth lights must not be on.

   Printed Circuit Board (pcb):
   If the pcb is built in:
   - Detach cable of pcb first.
   - Detach the pcb by removing the screws

2. Unscrew the valve head.
   Take care that the securing spring does not fly out.

3. Replace the membrane.
   The sealing disk must face the pressure tank

4. Reassemble in the reversed order.

5. Restart the booth and continue coating.

3.3 Mini Cyclon

The cyclone is a separating device which operates without moving parts and therefore requires little or no maintenance. The powder/air mixture enters the cyclone tangentially and thus acquires a swirling motion. The centrifugal force resulting from the high inlet velocity forces the powder against the wall of the cyclone and falls down, under the force of gravity, into the discharge unit. Only clean air remains in the centre of the cyclone, which flows upwards out of the cyclone.

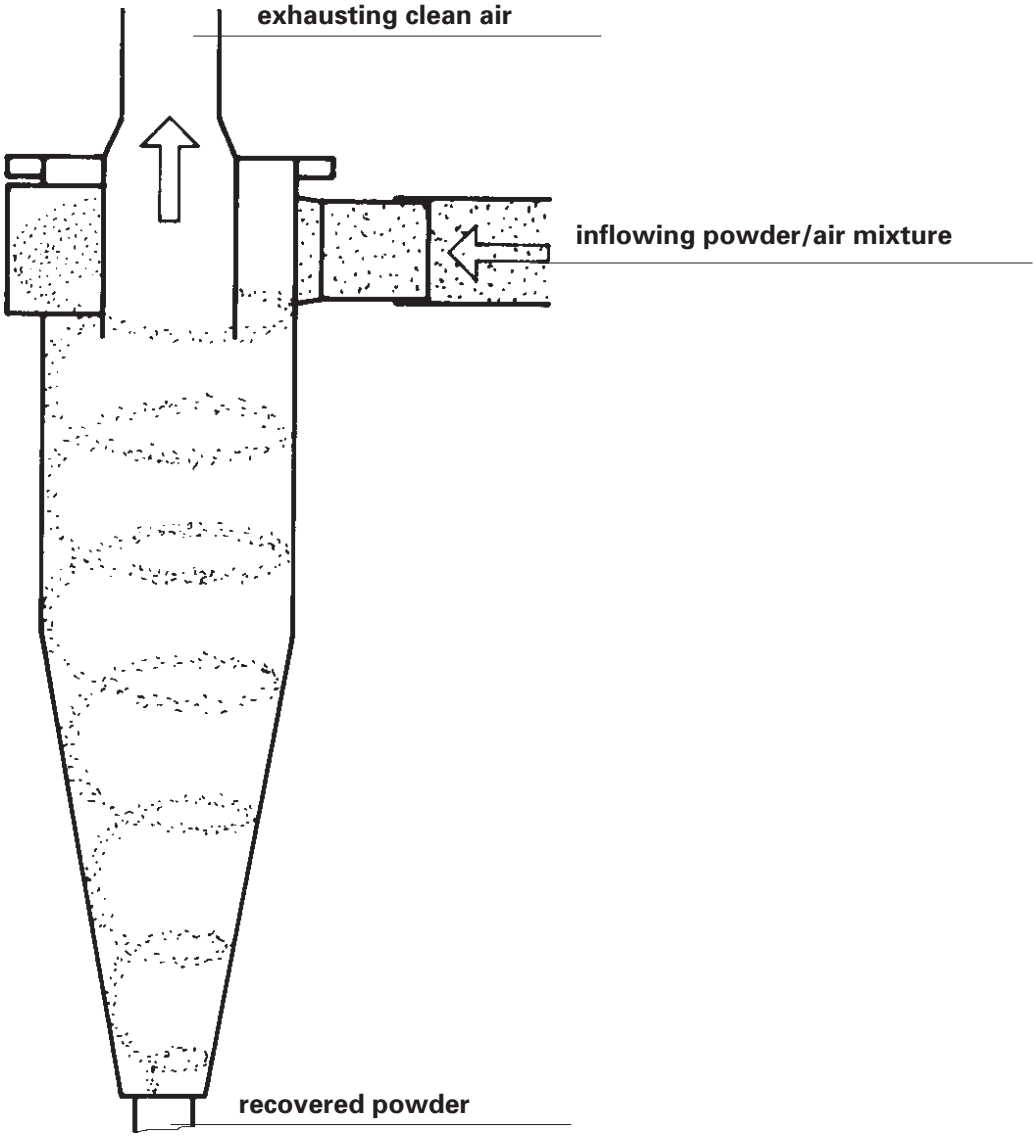

3.3 Maintenance to the Cyclone

1. Switch off the booth completely. The booth lights must not be on.

2. Dismantle by removing the nuts and hoses from the cyclone.
   Blow out the cyclone from top to bottom with compressed air.

3. Dismantle the cyclone :
   remove the cover.

ATTENTION: Handle the cyclone with care.
The cyclone must not be knocked or cleaned with a wire brush.
Damage such as dents can influence the proper functioning of the cyclone

4. Clean the cyclone.
   Wipe out the cyclone with a clean cloth.
   Remove sintered powder from cyclone.
   Plastic coating powder can be dissolved with nitro thinners, when necessary.

5. Reassemble the cyclone.

6. Switch on the booth

Issued 08/96

3.4 GEMA PS Powder Sieve

Powder falls from the delivery unit (pinch valve) through the inlet tube (**1**) into the sieve chamber (**2**) and onto the sieve (**3**). A vibration motor (**4**) causes the powder to fall through the sieve (**3**) and then through an outlet tube (**5**) into the powder hopper. All contamination and dirt particles are retained by the sieve. The sieve must, therefore, be checked and cleaned periodically. To do this thje hose clamp on the cover (**7**) must be released and the hose removed from the powder sieve. Now the cover (**2**) can be removed, after the star grips have been unscrewed (**6**). The contamination and dirt particles are best removed with an industrial vacuum cleaner. If the contamination and dirt particles are hard to remove the sieve should be removed and blown through, (from the under side) with compressed air.

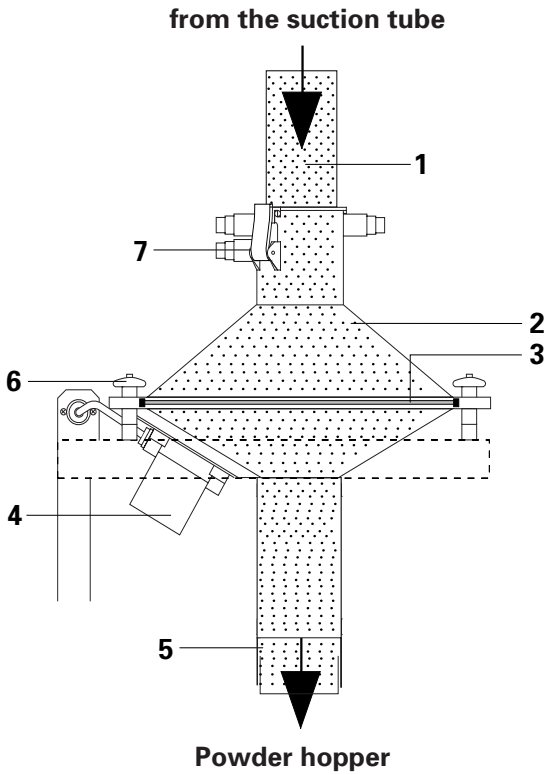

3.4 Maintenance to the PS Powder Sieve

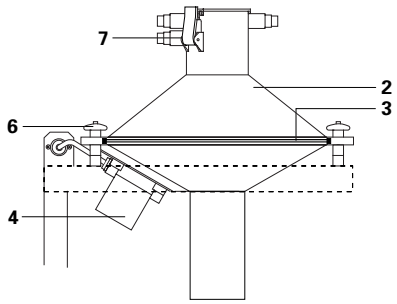

1. Switch off the booth completely. The booth lights must not be on.

2. Release the hose clamp band (**7**) from the cover of the powder sieve and remove the hose.

3. Unscrew the star grips (**6**) and remove the cover.

4. Contamination and dirt particles should removed with an industrial vacuum cleaner.

5. If the contamination and dirt particles are hard to remove or on a colour change the sieve (**3**) should be removed and blown through, (from the under side) with compressed air.

   Clean the housing with compressed air or wipe over with a clean cloth.

6. Switch on the booth again.

3.5 Sieve Machine

Contamination and dirt particles are removed from the recovered powder in the sieve machine.

The powder drops through the inlet (**1**) into the sieve machine. It is transported to the wire basket (**3**) by the feedscrew (**2**) and swirled through the sieve screen (stretched over the wire basket - **3**), without squeezing, by the rotating vanes (**4**). The sieve screen is held by rings and can vibrate freely, thereby cleaning itself. The recovered powder drops through the outlet (**6**) into the powder hopper. Coarse powder, and contaminants are discharged from the wire basket through the outlet (**5**) into a waste bag.

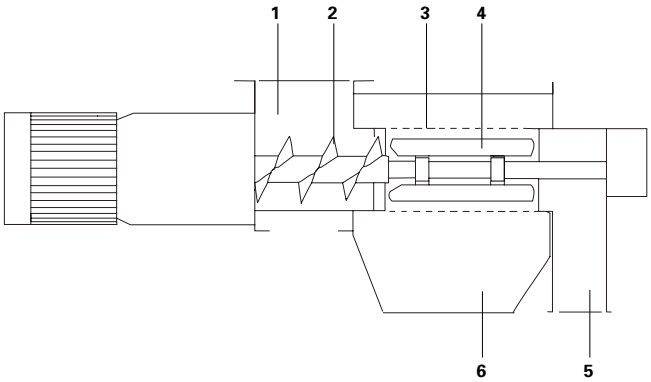

3.5 Maintenance to the Sieve Machine

1. Switch off the booth completely. The booth lights must not be on.

2. Carefully open the inspection cover of the sieve machine.

   The sieve should checked by turning it 350°.
   - Check for damage, tears, and clogging.

3. Changing the sieve screen:

   Before the sieve screen can be changed the sieve cover must be removed.

   Pull the wire basket from the sieve chamber.

4. The sieve screen can now be removed from the wire basket. Carefully fit the new sieve screen.

   See the next page - Replacing the sieve screen.

5. If the contamination and dirt particles are hard to remove or on a colour change the sieve should be removed and blown through with compressed air.

6. Cleaning the sieve machine:

   Blow out the sieve machine with compressed air when the wire basket is dismantled. An industrial vacuum cleaner can also be used and/or a dry brush or cloth.

7. Switch the booth on again.

3.5 Replacing the sieve screen

The sieve screen of the sieve hose is to be checked weekly or when unsatisfactory sieve function occurs. The sieve screen can be checked by opening the inspection cover and turning the the sieve 350° so that the whole screen surface can be inspected.
If only small defects are found in the SS these can be stuck together. However, larger defects require the complete sieve screen to be replaced.

When ordering sieve screens please give the following information:

1. Mesh size.
2. Sieve or machine type.
3. Machine number.

Available sieve screens :
160 µm mesh
200 µm mesh
250 µm mesh
300 µm mesh
355 µm mesh
414 µm mesh

Removing the sieve screen

1. Unscrew the sieve screen clamp bands (4)
2. Release the nuts (8) so that the sieve screen is not under tension and the sieve screen can be removed.

Fitting a new sieve screen:

1. When the sieve screen is placed in water it will become pliant and is easier to fit.
2. The longitudinal seam of the sieve screen must be fitted to lie under the rod with the end stop.
3. The seam of the sieve screen must be fitted in the direction of rotation (An arrow on the sieve screen indicates the direction of rotation)
4. The sieve screen must not be stretched too tight otherwise the sifting function will be diminished. If the mess becomes clogged, the sieve screen must be slackened by releasing the nuts (8) on the rods.
5. The cord on the edge of the sieve screen must be placed behind the hose clamp (4) when the sieve screen is fitted, so that the sieve screen doeds not slip off the supporting ring.

Bearing damage:

The bearings of the Sieve Machine, and the drive motor are maintenance-free and must only be replaced when the bearings are damaged.

Issued 08/96

3.6 Delivery unit: Pinch valves

Powder is separated from the air system of the powder recovery circuit through the pinch valve, above all in multiple colour recovery systems. The pinch valve prevents additional air from entering the sieve machine and makes possible an optimum filter function of the sieve machine.

During separation the powder passes through several pinch phases.

1. Powder falls through the upper, open valve into the intermediate chamber (the lower pinch valve remains closed).
2. The rubber sleeve in the upper pinch valve is squeezed together by compressed air and only then does the lower pinch valve open. The powder now falls through the open lower pinch valve into the sieve machine.
3. The lower pinch valve closes again and the upper pinch valve opens again.

A throttle ensures that the „opening valve“ opens only when the „closing valve“ has reached the correct operating pressure and is sealed. The pinch valves are switched periodically by the control unit.

Diagramm of the pinch phase 1

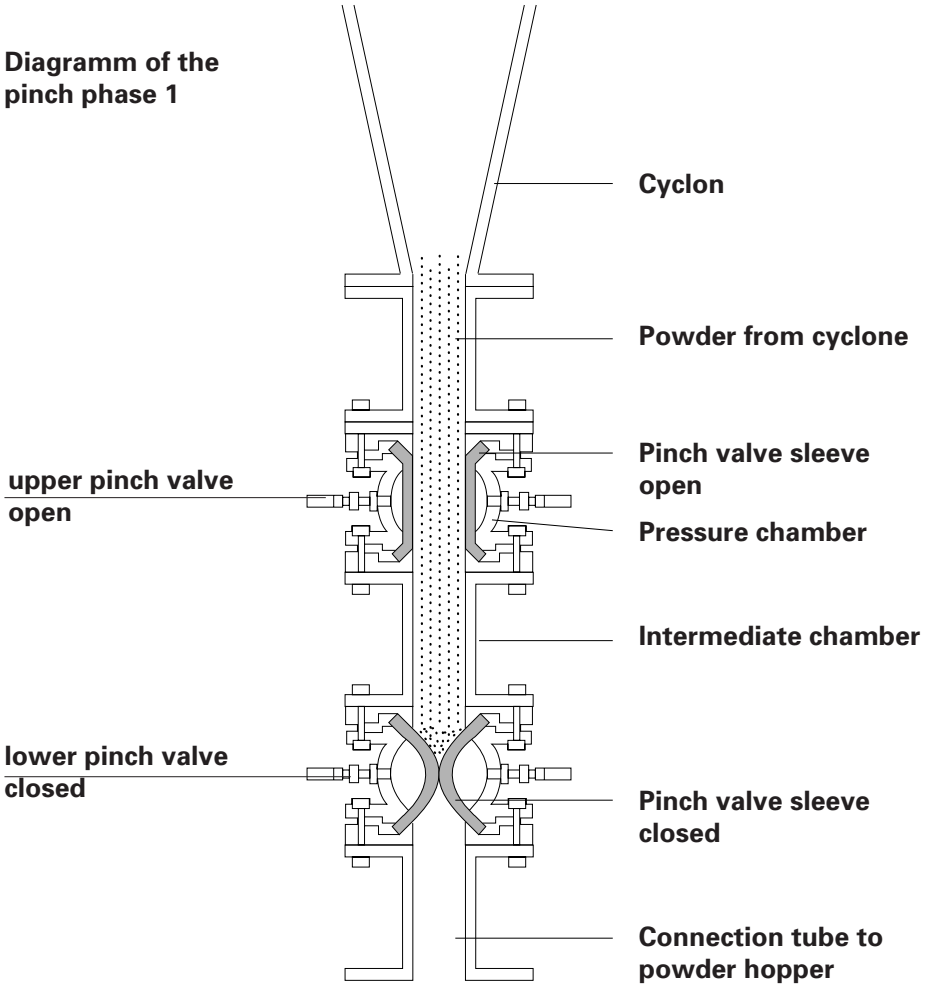

3.6 Maintenance on the pinch valve: Replacement of pinch hoses:

5

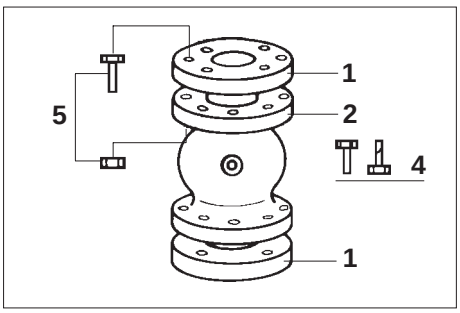

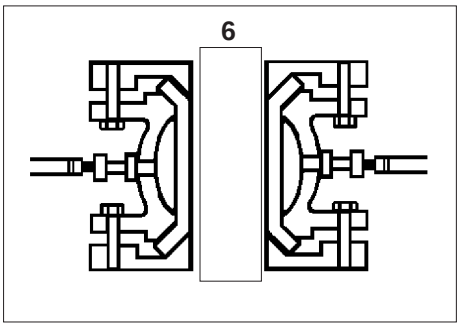

1. Switch off the booth completely. The booth lights must not be on.

2. Unscrew the flanges (**1**) and clean residual powder from the pinch valve.

3. Remove the old pinch valve sleeve.

4. Fit the new pinch sleeve (**2**) so that equal amounts of the sleeve protrude on each side.

5. Refit the flanges (**1**) and screw down lightly.
   Use 4 screws (**5**) M16x50 mm with nuts to fastening each flange

6. Fit the centering tube (**6**)

7. Set valve under pressure with 2,5 bar of compressed air.

8. Tighten fastening screws (**5**), evenly, and diagonally.

9. Discharge the compressed air and pull out the centering tube (**6**)

10. Secure the fastening screws (**4**).
    Mounting screws (**5**) can now be removed.

11. Set the valve under pressure with compressed air (2.5 bar)

12. Check the valve for leaking air and a firm fit of the pinch valve sleeve.
    The valves must be absolutely 100 % airtight in order to function properly.

Issued 08/96

3.7 Cleaning the Protective filter elements:

1. Switch off the booth completely. The booth lights must not be on.

2. Unscrew the nut of the protective filter cover with a suitable spanner.

3. Remove the filter by pulling upwards carefully and blow out filter cartridge with compressed air. Distance of the compressed air gun from the filter = approximately 50 cm.
   A too strong air blast will damage the filter material.

4. Replace the filter cartridge and screw the nut back on the cover.

3.8 Maintenance on the Absolute filter elements :

1. Switch off the booth completely. The booth lights must not be on.

2. Release the toggle clamps of the absolute filter elements and remove from the exhaust air unit.

3. Lay the absolute filter elements on the floor or in a cleaning booth with the exhaust side facing upwards.

   Carefully tap the cells around the perimeter with a wooden or plastic hammer.

   The filter cells must never be blown out with compressed air because the honeycomb structure will be damaged.

3.9 Fluidized Powder Hopper

The fluidized powder hopper is used in single colour, and multiple colour systems. The powder hopper is positioned either after the pinch valve under the Minicyclone (Multiple colour system) or after the pinch valve under the scavenging air filter (single colour system) and ensures an optimum powder transport, and quality in the coating system. At the same time, the powder hopper serves as a collection/mixing hopper for fresh powder, and recovered powder.

Most powders can be transported with the integrated continuous, and prefluidization. Fluidizing air (**1**) for fluidizing the powder passes through a porous plastic plate (**2**) at the base of the hopper. The powder acquires fluid-like characteristics, thereby. The powder/air mixture is sucked up through a suction tube (**3**) and an injector (**4**) to the powder coating gun.

When the booth is switched on the prefluidization process is also switched on. The powder receives a short, sharp blast of compressed air which, thereby, loosens up the powder. As soon as the prefluidization process is completed the continous fluidization automatically switches on and ensures continous powder fluidization.

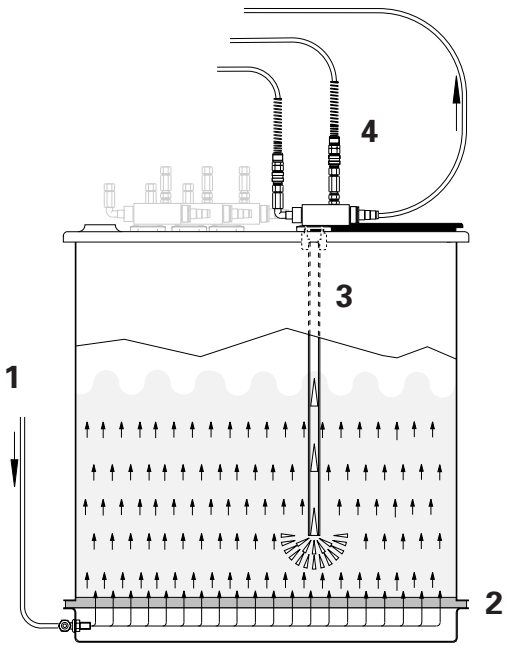

1. Fluidizing air (Air supply)
2. Porous plastic plate
3. Suction tube
4. Injector

PS Powder Sieve with vibrated Powder Hopper

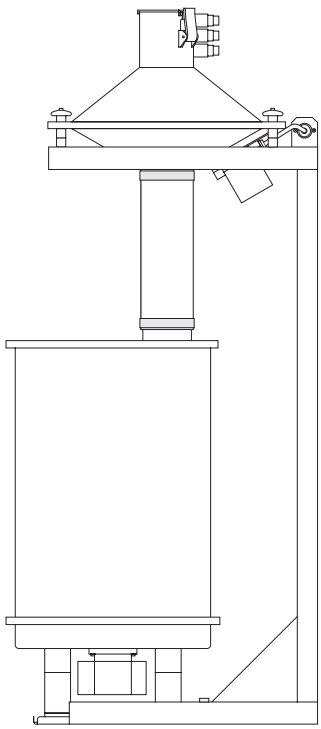

5. Colour change

5.1 Procedure for changing colours

The procedure for colour changes depends on the equipment configuration of the system. The configuration level of your system can be determined from the diagrams below. These illustrate the basic arrangements. Minor deviations are possible, however, they do not affect the colour change procedure.

Caution:	**Each filter belt is to be used for one group of colours only, e.g., yellow-light beige. For extreme colours (black, white, blue), one belt should be dedicated to each of these.**

Multiple colour system

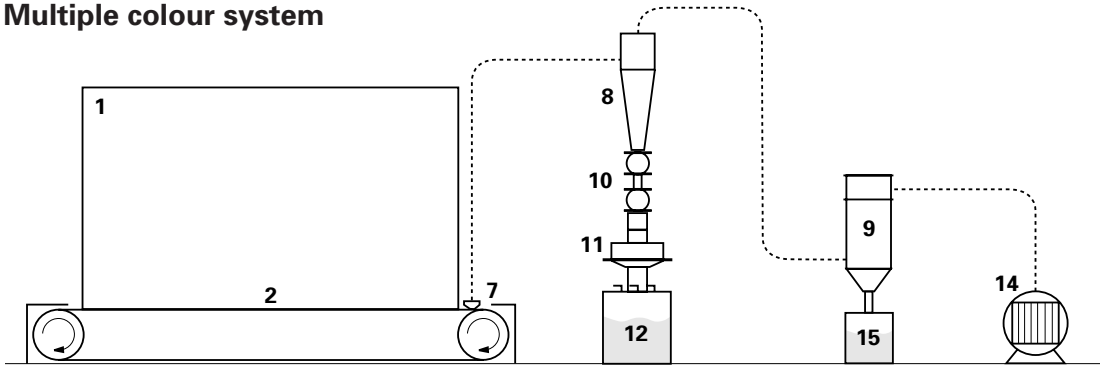

Multiple colour system with a second powder recovery system

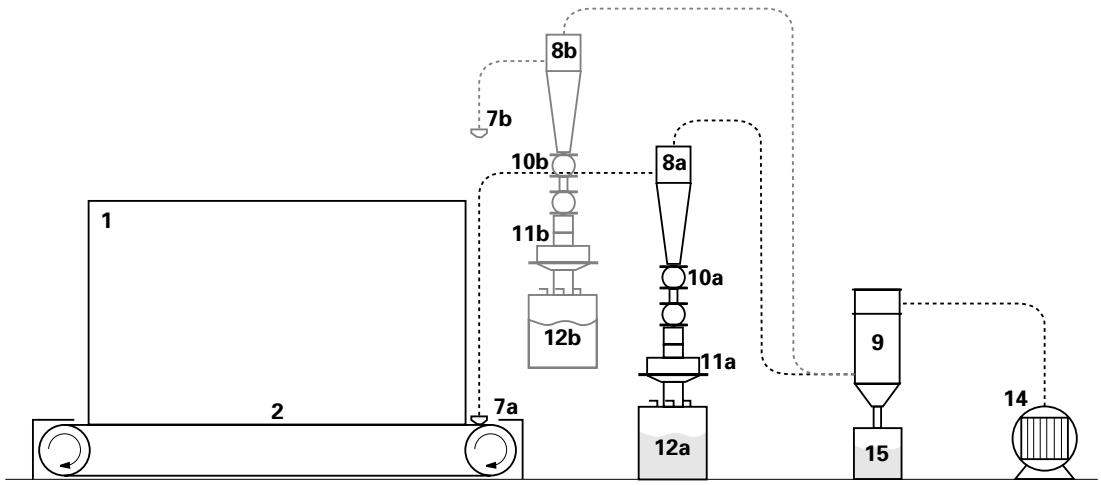

Für häufige Farbwechsel empfehlen wir auch im Mehrfarbensystem den Einsatz einer zweiten Rückgewinnungseinheit.

5.1 Colour change in Multiple colour system

1. **APS Equipment**: Make colour changes according to the APS Operating Instructions.

ATTENTION Before refilling the powder hopper the powder guns, powder hoses, and injectors must be cleaned separate operating instruction

2. Detach the **powder hoses** from the injectors and remove encrusted powder in the hoses by bending slightly. Blow through with compressed air in the direction of the guns. The best way to clean the hoses is to blow an approximately 15 cm cube of foam rubber through the hose, after the powder gun has been removed.

3. Clean the **powder guns** according to their separate operating instructions

4. Clean the interior of **booth** (1). See 6.2 for the exact procedure.
   Clean off filter belt (2) from time to time to keep the suction load within limits.

5. Blown out the **hose from the suction tube (4) to the Minicyclone (8)** inside the booth not to dirty the walls of the booth again.
   Replace the hose, if necessary.

6. Deep clean the filter belt (2), see section 6.3

7. Clean the **suction tube** : Remove sintered powder and clean the suction slots

   or

7.1 Replace the suction tube (X)

8. Clean the **Minicyclone** (8) or scavenging air filter (9) of the single colour system.

9. Clean the **pinch valves**.

Issued 08/96

5.1 Colour change in Multiple colour system

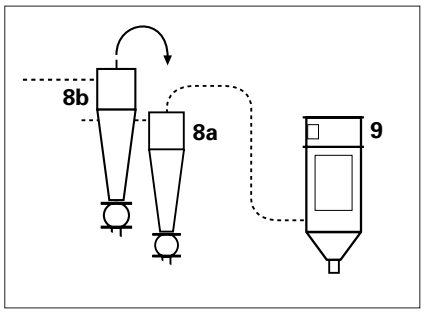

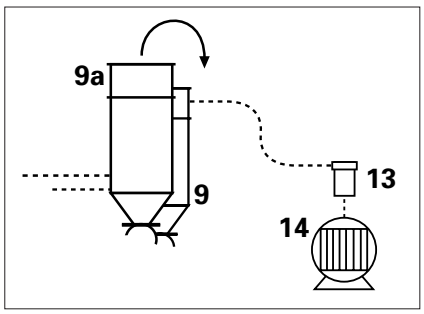

10. Dismantle the **powder sieve or Sieve Machine** and clean, when necessary replace the sieve filter.

11. Prepare the **APS Equipment** for the new colour, fill the powder hopper and connect.

12. Reconnect **hose** between the Minicyclone (8a) and scavenging air filter (9) to the Minicyclone (8b).

13. Reconnect the **hose** between the scavenging air filter (9a) and blower (14) at scavenging air filter.

14. **Clean workshop** or the area surrounding the installation.

5. Colour change

5.2 Procedure for changing colours: Single Colour System

Beim Farbwechsel im Einfarbensystem müssen die Filterpatronen im Spülluftfilter bzw. das Sieb im PS-Pulversieb oder in der Siebmaschine gewechselt werden.

Single Colour System

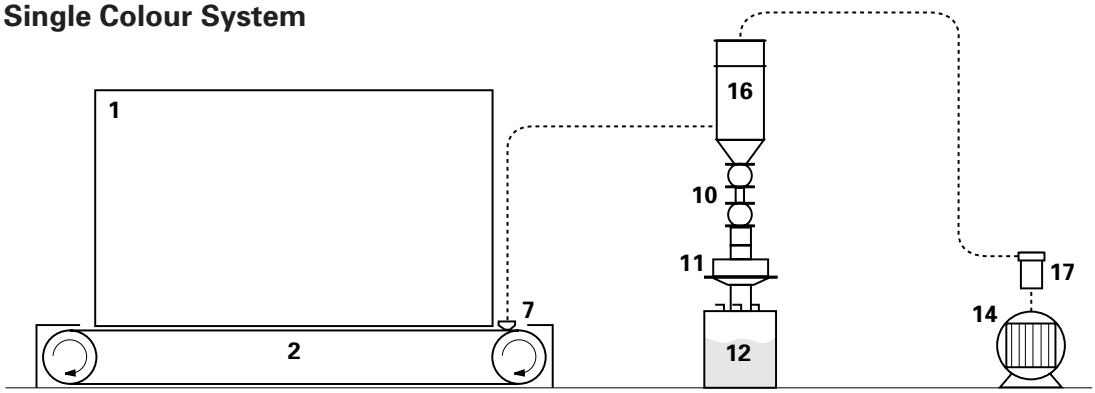

Single Colour System with 2. Powder Recovery Equipment

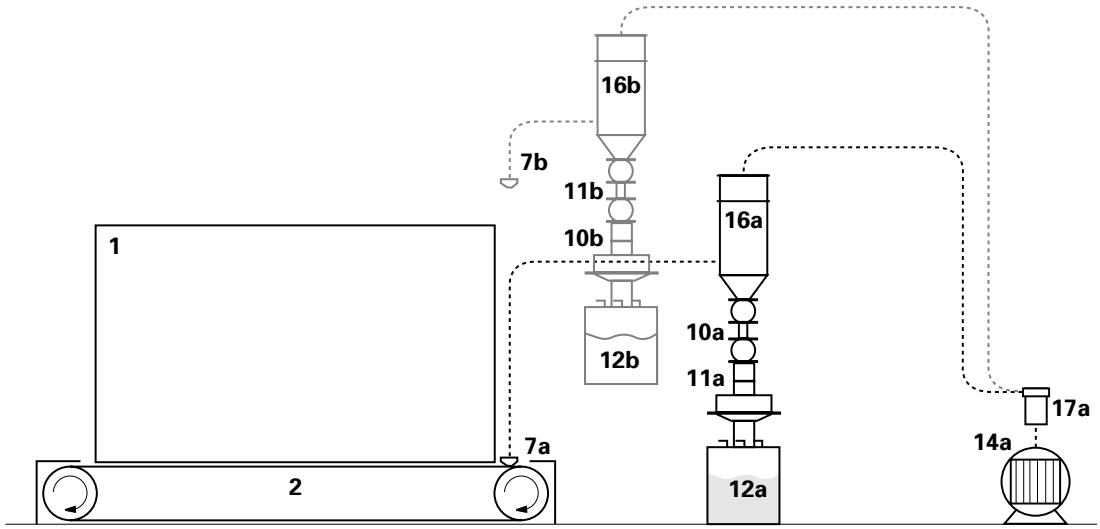

5.2 Colour change on a single colour system

1. **APS Equipment**: Make colour changes according to the APS Operating Instructions.

ATTENTION! Before refilling the powder hopper the powder guns, powder hoses, and injectors must be cleaned separate operating instruction

2. Detach the **powder hoses** from the injectors and remove encrusted powder in the hoses by bending slightly. Blow through with compressed air in the direction of the guns. The best way to clean the hoses is to blow an approximately 15 cm cube of foam rubber through the hose, after the powder gun has been removed.

3. Clean the **powder guns** according to their separate operating instructions

4. Clean the interior of **booth** (1). See 6.2 for the exact procedure.
Clean off filter belt (2) from time to time to keep the suction load within limits.

5. Blown out the **hose from the suction tube (4) to the Scavenging Air Filter (8)** inside the booth not to dirty the walls of the booth again.
Replace the hose, if necessary.

6. Deep clean the filter belt (2), see section 6.3

7. Clean the **suction tube** : Remove sintered powder and clean the suction slots

or

7.1 **Replace the suction tube** (X)

8. Clean the **Scavenging Air Filter** or replace the cartridges.

9. Clean the **pinch valves**.

Issued 08/96

5.2 Colour change on a single colour system

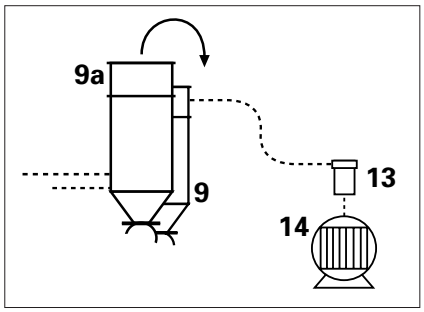

10. Dismantle the **powder sieve or Sieve Machine** and clean, when necessary replace the sieve filter.

11. Prepare the **APS Equipment** for the new colour, fill the powder hopper and connect.

12. Reconnect **hose** between the scavenging air filter to the suction tube.

13. **Clean workshop** or the area surrounding the installation.

6. Maintenance on the MFR System

Disposal	**Waste powder, and old filter belts which are no longer required must be diposed of or destroyed according to local regulations.**

Maintenance	**Continuous maintenance work increases the efficiency of your MFR Plant and avoids unnecessary wear and repairs.**

ATTENTION	**Maintenance should only be done by qualified personal and only when the equipment is disconnected from the Mains. Make sure that the plant cannot be switched on by mistake.**

Issued 08/96

6.1 Maintenance schedule

Daily or shift maintenance

- Blow out the powder hoses
- Clean the outside of the guns
- Remove accumulations of powder from inside the booth (1), or clean booth, see page XX
- Deep clean the filter belt (2), see page XX
- Check the operating temperature of the roller bearing in the filter belt drum - max. 60°C
- Sieve machine (11): Check sieve screen, see page XX
  Check the powder in the waste discharge for coarse material; empty the bag
- Check the operating temperature of the suction blower (14) - max. 60°C.
- Scavenging air filter (9): Check the filter cartridges, clean as required, see page XX

Weekly maintenance

- Clean the booth, see page XX
- Scavenging air filter (9): Check for correct functioning and clean the filter cartridges, see pages XX and XX
- Deep clean the filter belt, see XX
- Check the grounding contact to the APS equipment (12).
- Check the drive belt tension of the exhaust air blower (4), tension if required.
- Check the chain guides and drive sprockets for wear, tension if necessary.
- Suction Tube: Check the PTFE strip for wear
  Remove sintered powder from the suction slots.
- Empty the waste container in multiple colour system.
- Check the cyclone for sintering, and clean if necessary, see Cyclone.
- Check the sight glass of oil/water separator and empty if necessary.
- Blow compressed air through the Manostat piping.
  ATTENTION: Always blow through from the Manostat to the measuring point.
- Fan: Clean the fan blades.
- Clean the APS Equipment according to the relevant Operating Instructions.

Maintenance after ...

- the alarm on the Pressure display indicates „Pressure increase - After Filter“:
  Clean After Filter cells.
- Initially, after 1000 operating hours, thereafter, every 4000 hours:
  change the transmission oil of the drive motor (filter belt drive), Oil specifications: viscosity 25° Engler at 50°C,
- overhaul reciprocator after 6 months, see the relevant operating instructions.

6.2 Booth Cleaning:

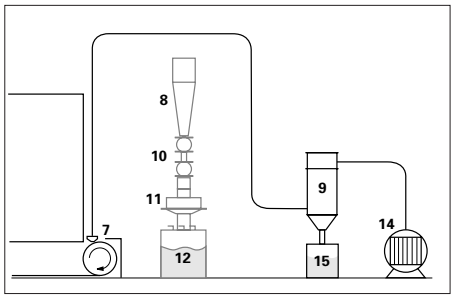

1. Select operating mode - „Cleaning“, see 4.4.2 Booth cleaning

2. Press the button - „Booth Cleaning“

3. The Minicyclone (8) must be bridged, and the suction tube (7) connected directly to the scavenging air filter (9) only with a multiple colour system, and on a colour change. See also section 5.1 Colour change with a multiple colour system.

4. Blow the powder hoses through, and clean the powder guns and injectors.

5. Drive the reciprocator out of the booth.

6. Scrape the powder off the booth walls with a hand squeegee from top to bottom or blow it off with compressed air and wipe down with a clean, dry cloth.

7. Clean the filter belt.
   Switch on the filter belt cleaning, see "Filter Belt Cleaning"

8. Blow out the suction tube with compressed air and clean. Replace if necessary.

9. When the booth is cleaned - continue coating (Press F5).

6.3 Filter belt cleaning:

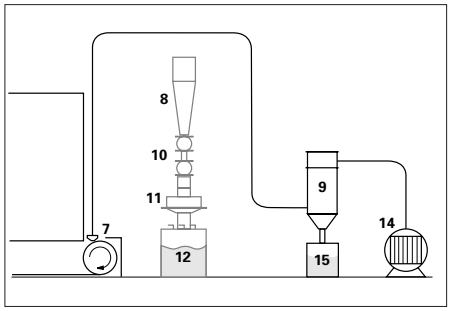

1. Select operating mode - „Cleaning“, see 4.4.2 Booth cleaning

2. **Multiple colour system only:**
   - Remove the hose between the minicyclone (8) and the scavenging air filter (9) and connect the suction tube (7) directly to the scavenging air filter (9).

3. Select „F2“ - Clean filter belt.

4. Run the filter belt for approximately 1 hour until it is 100 % deep cleaned.

5. **Multi-colour system only:**
   - Remove the hose between the scavenging air filter (7) and the suction tube (9) again and reconnect the suction tube with the minicyclone (8) and the scavenging air filter.

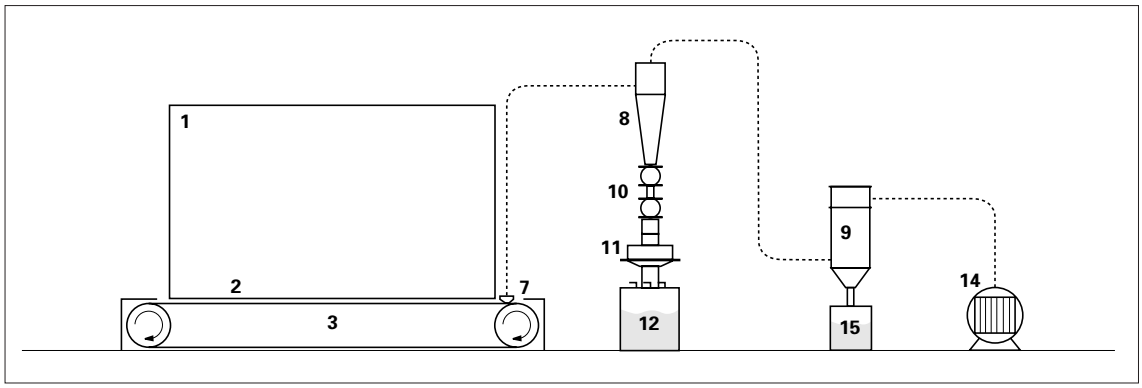

6. Exit the function by pressing „F4“ and continue coating.

Achtung!	**Periodische Tiefenreinigung des Filterbandes erhöht die Rückgewinnungs-effizienz Ihrer Anlage und sorgt für eine längere Lebensdauer des Filterbandes.**

6.4 Replacing the filter belt:

Two persons are required for changing the filter belt:

Before replacing the filter belt it must be "Deep cleaned".

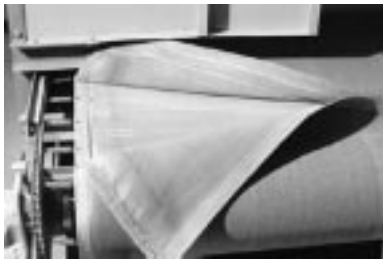

1. Select operating mode - "Cleaning", see 4.4.2 Booth cleaning

2. Select "F3" - Change filter belt or press the relevant button.

3. Remove the retaining rod, lift the suction tube and place on the support or remove.

4. Lift filter belt and pull off carrier belt.
   The filter belt is fitted with Velcro strip fasteners and can thus be simply pulled off.
   The filter belt can be started or stopped with the foot break when removing or fitting a filter belt.

5. Pull the filter belt off the carrier belt and fold carefully.

6. Fit the new filter belt.
   Fasten the beginning of the new filter belt to the carrier belt
   Caution: the beginning of the belt must not be placed on fastener. The filter belt must run exactly parallel to the carrier belt.

7. Mount the filter belt while the carrier belt is running. Using the foot brake pedal to advance a section of filter belt, then lower it, advance the next section and lower it, etc. Always check the Velcro strips. Press firmly together.

8. When the new filter belt is fitted press "F5" and continue coating.

Issued 08/96

Issued 08/96

7. Troubleshooting Guide

7.1 Overview

Filter belt/Suction tube

- *Pressure increase on the filter belt.* Filter belt clogged
- *Throttle vanes on the exhaust channel open too wide* Filter belt overloaded after belt cleaning or replacement or after cleaning the absolute filter elements.
- *The throttle vanes in the exhaust channel are closed too much.* Too little air.

The After Filter is clogging:

- *Damaged filter belt* (Powder seeps through).
- Due to a *too high powder-laden air-volume* drawn through the filter belt (extremely fine powder).
- The *absolute filter* has not been serviced for a long period.
- The *sieve mesh* is too small.
- The *operating, and pause intervals* are incorrectly set.

The scavenging air filter is clogged:

- No or too little *compressed air*
- The *filter is damp or sticky* : Water or oil in the compressed air.
- *Additional air in the scavenging air filter*. Pinch valve (10) defect (single colour system).
- One or more *filter groups have not been blown off* : The PCB or the solenoid is defect.
- *The powder is too damp*.
- *Interval times* between the blow-off cycles are too long.
- The automatic *fresh powder transport is set too high* (single colour system). The filter cartridges are blown off too often - a filter cake cannot build up.
- The *sieve mesh* is too small.
- The sieve is clogged with powder.
- The *air pressure* of the compressed air is greater than 0.5 bar.
- The *air pressure* of the compressed air to low.

Accumulation on the protective filter :

- *The filter cartridge(s) in the scavenging air filter is torn* or screwed in so that it leaks.
- *Additional air in the cyclone* : pinch valve (10) defect.

Issued 08/96

1. Filter belt cleaning:	**Leak:**	Solution:
No powder or only very little powder is sucked up.	1) Check the hose connections from the suction tube to the side channel blower.	Seal leaks
	2) Check the Scavenging air filter door, burst membrane, and connection to the waste hopper.	
	3) Check the pinch valve, and the rotary valve seals.	
	4) Check the cyclone for sintering and leaks.	
	Clogging:	
	1) Check the suction tube slots.	Clean
	2) Check the hoses for leaks.	
	3) Check the sieve machine for clogging.	
	4) Check the scavenging air filter, cleaning sequence, pressure gauge.	6 bar compressed air, check the interval or contact a GEMA service centre.
	5) Pressure increase on the filter belt, filter belt is clogging.	Check powder recovery volume. Deep clean.
	6) Check the compressed air for humidity	
	Side channel blower:	
	Check the functioning, and direction of rotation	
2) Poor recovery volume	1) Check the powder recovery system for leaks	Eliminate
	2) Check for clogging.	
	3) Check the pinch valve for satisfactory functioning (intake capacity, and interval).	

Issued 08/96

3) Powder emerges from the booth.	**Exhaust air:**	
	1) Check the exhaust fan: Pressure gauge, direction of rotation.	
	2) Draughts in the workshop: Longitudinal or transverse air flow through the booth.	eliminate
	3) Too many openings.	Close the openings
	4) Filter belt clogged.	Deep clean the filter belt or use a new filter belt.
	5) Suction performance too low.	Adjust the suction performance according to the operating requirements.
4) Scavenging air filter clogs up very quickly:	1) Check the cleaning function/interval, pause times, wrong pressure setting, no compressed air	6 bar compressed air, check the interval or contact a service centre.
	2) Cleaning pressure = 6 bar.	
	3) Check the oil/water content of the compressed air.	
	4) Filter cartridges worn out.	
	5) Waste powder hopper overfilled.	
	6) One or more filter groups are not blown off.	
5) After Filter clogs very quickly:	1) Damaged filter belt: Powder escapes through the damaged point.	
	2) Exhaust performance too high: Powder is sucked through the filter belt (powder too fine).	
	3) After Filter cleaning: the After Filter cleaning does not function or is incorrectly set.	

Issued 08/96

6) Bad sieve function / sieve clogged	1) The sieve mesh is too small	1) Select a larger mesh.
	2) The sieve is clogged with powder.	2) Clean or select a larger mesh.
7) The waste hopper is filled too quickly.	1) Additional air in the cyclone: Pinch valve is defect or sintered up.	1) Check the seals of the cyclone - Check the pinch valve or replace the pinch valve sleeve.
8) Single colour system : **Powder in the protective filter.**	1) Torn filter cartridge(s) in the scavenger air filter or not properly screwed in.	1) Replace the filter cartridges or screw in properly.

Issued 08/96